Town of Highland Park, Texas
TOWN COUNCIL MEETING
AGENDA

8:00 AM
May 6, 2025

4700 Drexel Drive Highland Park, TX 75205
Town Council Chambers

I. CALL TO ORDER

II. INVOCATION

III. PUBLIC COMMENT

This portion of the agenda is the public's opportunity to address the Town Council about any item listed on the agenda, except public hearings. Comments related to public hearings will be heard when the specific hearing begins. Public comments are limited to three (3) minutes per speaker, unless otherwise required by law. Per the Texas Open Meetings Act, the Town Council is not permitted to take action on or discuss any item not listed on the agenda. Items suggested for action may be placed on a future agenda at the Town Council's sole discretion.

IV. RECOGNITION

A. Recognize Chief Building Official, Cherish Nieto, for successfully earning the distinction of Certified Building Official, given by the International Code Council.

V. CONSENT AGENDA

All items under the Consent Agenda are considered to be routine by the Town Council and will be enacted by one motion and vote. There will be no separate discussion of items unless a request by a Council Member is made prior to the time of the Town Council voting on the motion. In such event, the item will be removed, without debate, from the general order of business and considered in its normal sequence.

A. Take action on a resolution declaring certain property surplus and/or salvage and authorize the Town Administrator or his designee to sell, convey, or otherwise dispose of all items listed in Exhibit A of the resolution.

B. Take action authorizing the Town Administrator to execute a contract with Simply Horticulture, LLC for professional tree maintenance services.

C. Take action authorizing the Town Administrator to execute a contract with Moonlighting, Inc. for professional electrical services.

D. Take action approving a resolution to ratify the contract with Cole Construction Inc, for the emergency stormwater repair for Lakeside Drive.

E. Take action on the minutes of the Town Council meeting held on April 15, 2025.

F. Take action on the minutes of the Town Council study session held on April

15, 2025.

G. Take action on the minutes of the Special Town Council meeting held on April 9, 2025.

VI. MAIN AGENDA

A. Review, discuss, and take action to extend the construction time period for a new single-family residence at 3821 Gillon Avenue from May 16, 2025, to November 30, 2025. An extension of six and one-half months.

B. Review, discuss, and consider a referral to the Zoning Commission a request to amend Planned Development Ordinance No. 1257 regarding new athletic fields and related facilities for McCullogh Intermediate School/Highland Park Middle School, located at 3520 Normandy Avenue.

C. Review, discuss, and take action on a proposed replat creating Lot 1R1, Block 170/2 of the Highland Park Shops Addition, a replat of Lots 1 through 6, Block 2, Highland Park Acreage Addition, Lot 1R, Block 170/2, Corrigan Oak Lawn Addition, a part of Prescott Avenue, and a part of Wycliffe Avenue, located at 4200 Oak Lawn Avenue.

D. Review, discuss and consider authorizing the Town Administrator to execute a contract with the Mejorando Group for Strategic Planning and Facilitation Services.

VII. ADJOURNMENT

Any item on this posted agenda could be discussed in closed session as long as it is within one of the permitted categories under Sections 551.071 through 551.076 and 551.087 of the Texas Government Code.
A member of the public may address the governing body regarding an item on the agenda either before or during the body's consideration of the item, upon being recognized by the presiding officer or the consent of the body.
SPECIAL ACCOMMODATIONS FOR TOWN COUNCIL MEETINGS: Let us know if you need special assistance of any kind.

Town of Highland Park
Town Council
Tuesday, May 6, 2025

Item Coversheet

Recognize Chief Building Official, Cherish Nieto, for successfully earning the distinction of Certified Building Official, given by the International Code Council.

PRESENTED BY: Jeff Armstrong, Director of Community Development

BACKGROUND:

Cherish Nieto, Chief Building Official, recently passed the final requirements to obtain the distinction of Certified Building Official ("CBO"). In addition to substantial knowledge and experience, one must pass three timed exams to become a CBO. The exams include knowledge of building codes, legal/law, and administration/management.

RECOMMENDATION

N/A

FINANCIAL IMPACT

N/A

ATTACHMENTS

None

Town of Highland Park
Town Council
Tuesday, May 6, 2025

Item Coversheet

Take action on a resolution declaring certain property surplus and/or salvage and authorize the Town Administrator or his designee to sell, convey, or otherwise dispose of all items listed in Exhibit A of the resolution.

PRESENTED BY: John Samford, Director of Finance

BACKGROUND:

The Town purchased the property located at 5000 Holland Avenue, known as the Westside Court Apartments, in January 2024. The site consists of a two-story apartment building with a sub-grade parking garage (under the west portion of the building). The apartment complex has 18 units (no unit 13), a laundry room, a courtyard area, surface parking, utilities, and landscaped grounds.

The apartments have been vacated, and Town staff are preparing the site for demolition to allow for future municipal use of the property. Most of the apartment units contain personal property, which is comprised mostly of appliances that were left in place. As part of the demolition preparation, each unit was inventoried. Town staff reached out to a third-party auctioneer and determined that the personal property contents were estimated to be less than $3,000 (approximately $150/unit). This property is considered under state law to be "salvage property" or "surplus property" because it is no longer used, has little or no value to the Town, and has no value or minimal value for an attempted sale.

The accompanying resolution authorizes the Town Administrator, or his designee, to sell, convey, or otherwise dispose of all items listed in "Exhibit A" in accordance with state law and in a manner that realizes the maximum benefit and minimum cost to the Town.

RECOMMENDATION

Town staff recommends the Town Council approve the proposed resolution accompanying this agenda item.

FINANCIAL IMPACT

It is expected that the Town will realize minimal value for the items listed in the exhibit to the accompanying resolution.

ATTACHMENTS

RESO 004-25 Surplus-Salvage Property

RESOLUTION NO. 004-25

A RESOLUTION OF THE CITY COUNCIL OF THE TOWN OF HIGHLAND PARK, TEXAS, DECLARING CERTAIN PROPERTY SURPLUS AND/OR SALVAGE; PROVIDING FOR THE AUTHORIZATION TO DISPOSE OF SAID PROPERTY; AND PROVIDING AN EFFECTIVE DATE

WHEREAS, personal property sold by the Town of Highland Park, Texas (the "Town") is exempt from auction and bidding procedures under Chapter 252 of the Texas Local Government Code; and

WHEREAS, it has been determined that the Town is in possession of personal property that is considered under state law to be "salvage property" or "surplus property" because it is no longer used, has little or no value to the Town, and has no value or minimal value for an attempted sale; and

WHEREAS, this surplus and/or salvage property is described in the list designated as "Exhibit A", which is attached hereto and incorporated herein.

NOW, THEREFORE, BE IT RESOLVED by the Town Council of the Town of Highland Park, Texas:

SECTION 1. The findings recited above are incorporated as if fully set forth in the body of this Resolution.

SECTION 2. That all items described in "Exhibit A" to this Resolution are hereby declared surplus and/or salvage property, and the Town Administrator, or his designee, is hereby authorized to sell, convey or otherwise dispose of all items listed in "Exhibit A" in accordance with state law and in a manner that realizes the maximum benefit and minimum cost to the Town.

SECTION 3. This Resolution shall take effect immediately upon its passage.

PASSED AND APPROVED by the Highland Park Town Council on this 6th day of May 2025.

APPROVED AS TO FORM:

Susan Thomas
Town Attorney

APPROVED:

Will C. Beecherl
Mayor

ATTEST:

Joanna Mekeal
Town Secretary

EXHIBIT A

LIST OF SURPLUS AND/OR SALVAGE PROPERTY

Unit 1:
Frigidaire fridge
GE stove
GE microwave

Unit 6:
Samsung microwave
Whirlpool stove
Frigidaire fridge
Whirlpool dishwasher
GE stacked washer/dryer

Unit 7:
GE microwave
GE stove
Magic Chef Fridge

Unit 8:
Small magic chef fridge
GE microwave
GE stove

Unit 9:
Whirlpool stove
Frigidaire fridge
Frigidaire dishwasher
GE stacked washer/dryer

Unit 10:
GE stacked washer/dryer
No name microwave
Whirlpool stove
Frigidaire fridge
Frigidaire dishwasher

Unit 11:
GE fridge
GE stove
GE microwave
GE dishwasher
GE stacked washer/dryer

Unit 12:
GE stacked washer/dryer
GE stove
GE microwave
GE fridge
GE dishwasher

Unit 14:
GE stacked washer/dryer
GE fridge
GE dishwasher
GE microwave
GE stove

Unit 16:
GE microwave
GE stove
GE dishwasher
GE fridge

Unit 17: (very old appliances)
GE stove
Frigidaire fridge
Hotpoint dishwasher

Unit 18:
GE fridge
Frigidaire stove
Frigidaire dishwasher

Unit 19:
Frigidaire fridge
Frigidaire dishwasher
Frigidaire stove

Located outside:
Carrier Aquasnap chiller. Other ancillary items include iron railings and various types and grades of bricks and landscaping stones.

Basement Laundry Room:
4 – coin operated washers and dryers

Note: Units 2,3,4,5 and 15 are currently not accessible as they are being used by the Department of Public Safety for training purposes. These units are anticipated to contain three (total of fifteen) medium-grade appliances, stoves, microwaves and fridges (similar to the items listed in this exhibit).

Town of Highland Park
Town Council
Tuesday, May 6, 2025

Item Coversheet

Take action authorizing the Town Administrator to execute a contract with Simply Horticulture, LLC for professional tree maintenance services.

PRESENTED BY: Lori Chapin, Director of Engineering

BACKGROUND:

The purpose of this item is to award an annual contract that the Town may utilize for tree maintenance services for emergency removals, maintenance of parkway trees, and trees within the park system.

The Town's previous contract, initiated in 2020, was structured as a three-year contract with the ability to renew for two additional one-year terms for a total of five years. The contract expired on April 21, 2025.

The project was advertised on April 2 and April 9, 2025, and seven bids were received. The bid package requested hourly rates for certified arborist services, tree pruning, tree removal, stump grinding services, and subsurface fertilization. This contract was based on the submittal of competitively sealed proposals. In addition, selection was based on the lowest qualified responsible bidder who offered the best value based on the weighted selection criteria as established in the bid documents. The result of the selection may not necessarily be the lowest bidder, but is the lowest qualified bidder to execute the work based on experience and qualifications. Simply Horticulture, LLC submitted the lowest qualified bid based on the selection criteria. Simply Horticulture, LLC has worked under contract for the Town since 2020 and has maintained a reliable and positive working relationship.

The rates and quantities set forth in the bidding documents approximately represent the work to be performed and are for the purpose of comparing the bids on a uniform basis. The contract amount may vary on an annual basis and will not exceed $100,000 annually based on actual quantities and work performed.

The contract is valid beginning on the bid award date and ending September 30, 2025. The Town may renew the contract for two additional one-year terms for a maximum contract of three years ending September 30, 2028.

RECOMMENDATION

Staff recommend authorizing the Town Administrator to execute a service contract with Simply Horticulture, LLC for professional tree maintenance services for an amount not to exceed $100,000 annually, for a total maximum contract price of $300,000 (total of three years). Funding is subject to the contract renewal terms, subsequent appropriated funds and contractor performance.

The Engineer's recommendation for award and bid tabulation are attached for reference.

FINANCIAL IMPACT

Funding is derived from the Parks Operating Budget, which includes $80,520 for FY 2025.

ATTACHMENTS

Tree Maintenance Services Bid Recommendation Letter -R

April 29, 2025

Ms. Lori Chapin, P.E.
Director of Engineering
Town of Highland Park
4700 Drexel Drive, Highland Park, TX 75205

RE: ***Tree Maintenance Services Bid (Bid No. 25-01-008-02)***

Ms. Chapin,

On April 22, 2025, the Town of Highland Park received bids for the Tree Maintenance Services Bid project. The following bids were received:

Bidder	Base Bid
Simply Horticulture, LLC	$3,193.00
Arbor Masters	$3,265.00
SavATree	$4,599.50
Southern Botanical	$4,825.00
Monster Tree Service of North Dallas	$4,990.00
Holcomb Tree Service	$5,240.00
Bartlett Tree Experts	$5,955.00

Kimley-Horn and Associates, Inc. (Kimley-Horn) has reviewed the bidder's qualifications and contacted the references provided by each bidder.

Kimley-Horn completed a scoring exercise in accordance with the Evaluation Criteria provided in the bidding documents. The following scores were determined:

Bidder	Evaluation Criteria Score
Simply Horticulture, LLC	100.00 / 100
Arbor Masters	90.90 / 100
SavATree	84.71 / 100
Holcomb Tree Service	80.47 / 100
Southern Botanical	79.09 / 100

Monster Tree Service of North Dallas	73.99 / 100
Bartlett Tree Experts	68.81 / 100

Based on this scoring and the information provided by references, Kimley-Horn has no objections to awarding the contract to Simply Horticulture, LLC.

Enclosed is a copy of the Bid Tabulation and Evaluation Worksheet for your reference. Should you have any questions or comments, please do not hesitate to contact us.

Sincerely,

Kimley-Horn and Associates, Inc.

Christian Noskin, P.E.

Rev 01/18

BID TABULATION
KIMLEY-HORN AND ASSOCIATES, INC.

Owner: **Town of Highland Park (Bid No. 25-01-008-02)**
Job No.:
Project: **Tree Maintenance Services Bid**
Date: **April 22, 2025**

				BIDDER 1		BIDDER 2		BIDDER 3		BIDDER 4		BIDDER 5		BIDDER 6		BIDDER 7		AVERAGE	
				Simply Horticulture, LLC 640 Debbie, Ct. Prosper, TX 75078		Arbor Masters 8250 Cole Parkway Lenexa, KS 66227		SavATree 2114 Anson Rd. Dallas, TX 75235		Southern Botanical 3151 Halifax Street Suite 100 Dallas, TX 75247		Monster Tree Service of North Dallas 2745 N Odell Court Grapevine, TX 76051		Holcomb Tree Service 10625 Ferguson Rd. Dallas, TX 75228		Bartlett Tree Experts 11376 Kline Dr. Dallas, TX 75229			
Item No.	**Item Description**	**Quantity**	**Unit**	**Unit Price**	**Item Cost**	**Unit Price**	**Item Cost**	**Unit Price**	**Item Cost**	**Unit Price**	**Item Cost**	**Unit Price**	**Item Cost**	**Unit Price**	**Item Cost**	**Unit Price**	**Item Cost**	**Unit Price**	**Item Cost**
BASE BID																			
1	2-MAN CREW (1 CLIMBER AND 1 GROUNDSMAN)(REGULAR HOURS)	1	HR	$150.00	$150.00	$140.00	$140.00	$194.00	$194.00	$158.00	$158.00	$165.00	$165.00	$170.00	$170.00	$220.00	$220.00	$171.00	$171.00
2	3-MAN CREW (2 CLIMBERS AND 1 GROUNDSMAN)(REGULAR HOURS)	1	HR	$225.00	$225.00	$160.00	$160.00	$291.00	$291.00	$237.00	$237.00	$250.00	$250.00	$255.00	$255.00	$330.00	$330.00	$249.71	$249.71
3	4-MAN CREW (2 CLIMBERS AND 2 GROUNDSMEN)(REGULAR HOURS)	1	HR	$295.00	$295.00	$180.00	$180.00	$388.00	$388.00	$316.00	$316.00	$325.00	$325.00	$340.00	$340.00	$440.00	$440.00	$326.29	$326.29
4	BUCKET TRUCK WITH 3-MAN CREW (2 CLIMBERS AND 1 GROUNDSMAN)(REGULAR HOURS)	1	HR	$295.00	$295.00	$250.00	$250.00	$388.00	$388.00	$252.00	$252.00	$400.00	$400.00	$300.00	$300.00	$440.00	$440.00	$332.14	$332.14
5	2-MAN CREW (1 CLIMBER AND 1 GROUNDSMAN)(AFTER HOURS)	1	HR	$150.00	$150.00	$200.00	$200.00	$291.00	$291.00	$270.00	$270.00	$205.00	$205.00	$337.50	$337.50	$260.00	$260.00	$244.79	$244.79
6	3-MAN CREW (2 CLIMBERS AND 1 GROUNDSMAN)(AFTER HOURS)	1	HR	$225.00	$225.00	$225.00	$225.00	$437.00	$437.00	$405.00	$405.00	$325.00	$325.00	$450.00	$450.00	$360.00	$360.00	$346.71	$346.71
7	4-MAN CREW (2 CLIMBERS AND 2 GROUNDSMEN)(AFTER HOURS)	1	HR	$295.00	$295.00	$250.00	$250.00	$582.00	$582.00	$540.00	$540.00	$405.00	$405.00	$600.00	$600.00	$480.00	$480.00	$450.29	$450.29
8	BUCKET TRUCK WITH 3-MAN CREW (2 CLIMBERS AND 1 GROUNDSMAN)(AFTER HOURS)	1	HR	$295.00	$295.00	$325.00	$325.00	$582.00	$582.00	$450.00	$450.00	$475.00	$475.00	$525.00	$525.00	$480.00	$480.00	$447.43	$447.43
9	SUB SURFACE FERTILIZATION (1,000 SQ. FT.)	1	EA	$130.00	$130.00	$230.00	$230.00	$222.00	$222.00	$195.00	$195.00	$240.00	$240.00	$200.00	$200.00	$300.00	$300.00	$216.71	$216.71
10	SUB SURFACE FERTILIZATION (2,500 SQ. FT.)	1	EA	$245.00	$245.00	$280.00	$280.00	$222.00	$222.00	$495.00	$495.00	$500.00	$500.00	$500.00	$500.00	$750.00	$750.00	$427.43	$427.43
11	SUB SURFACE FERTILIZATION (5,000 SQ. FT.)	1	EA	$395.00	$395.00	$310.00	$310.00	$424.00	$424.00	$789.00	$789.00	$1,000.00	$1,000.00	$800.00	$800.00	$1,500.00	$1,500.00	$745.43	$745.43
12	INSTALL UP TO 30' OF 5/16" EXTRA HEAVY STRENGTH CABLES WITH FORGED EYE BOLTS AND DEAD-END SPLICES	1	LS	$400.00	$400.00	$550.00	$550.00	$330.00	$330.00	$450.00	$450.00	$350.00	$350.00	$500.00	$500.00	$230.00	$230.00	$401.43	$401.43
13	ARBORIST CONSULTATION TO PERFORM TREE RISK ASSESSMENTS	1	EA	$75.00	$75.00	$150.00	$150.00	$235.00	$235.00	$250.00	$250.00	$150.00	$150.00	$225.00	$225.00	$150.00	$150.00	$176.43	$176.43
14	TRUNK INJECTIONS	1	EA	$18.00	$18.00	$15.00	$15.00	$13.50	$13.50	$18.00	$18.00	$200.00	$200.00	$37.50	$37.50	$15.00	$15.00	$45.29	$45.29
TOTAL AMOUNT BID - BASE BID					**$3,193.00**		**$3,265.00**		**$4,599.50**		**$4,825.00**		**$4,990.00**		**$5,240.00**		**$5,955.00**		**$4,581.07**

Town of Highland Park
Town Council
Tuesday, May 6, 2025

Item Coversheet

Take action authorizing the Town Administrator to execute a contract with Moonlighting, Inc. for professional electrical services.

PRESENTED BY: Lori Chapin, Director of Engineering

BACKGROUND:

The purpose of this item is to award an annual contract that the Town may utilize for electrical services within the park system.

The Town's previous contract was initiated in 2020 and was structured with a three-year contract with the ability to renew for two additional one-year terms for a total of five years. The contract expired on April 21, 2025.

The project was advertised on April 2 and April 9, 2025, and one bid was received. The bid package requested hourly rates for licensed electrician services for park landscape lighting, tennis court lighting, tree lighting, LED conversion, streetlights located within parks, and holiday light installations and removals. This contract was based on the submittal of competitively sealed proposals. In addition, selection was to be based on the lowest qualified responsible bidder who offered the best value based on the weighted selection criteria as established in the bid documents. The result of the selection may not necessarily produce the lowest bidder, but would be the lowest qualified bidder to execute the work based on experience and qualifications. Although bid packets were distributed to 27 electrical services and publicly advertised on CIVCAST, a public bidding platform, Moonlighting, Inc. submitted the only qualified bid. Moonlighting has worked under contract for the Town since 2020 and has maintained a reliable and positive working relationship.

The rates and quantities set forth in the bidding documents approximately represent the work to be performed and are for the purpose of comparing the bids on a uniform basis. The contract amount may vary on an annual basis and will not exceed $100,000 annually based on actual quantities and work performed.

The contract is valid beginning on the bid award date and ending September 30, 2025. The Town may renew the contract for two additional one-year terms for a maximum contract of three years ending September 30, 2028.

RECOMMENDATION

Staff recommend authorizing the Town Administrator to execute a service contract with Moonlighting, Inc. for professional electrical services for an amount not to exceed $100,000 annually, for a total maximum contract price of $300,000 (total of three years). Funding is subject to the contract renewal terms, subsequent appropriated funds, and contractor performance.

The Engineer's recommendation and bid tabulation for award are attached for reference.

FINANCIAL IMPACT

Funding is derived from the Parks Operating Budget, which includes $35,630 for FY 2025.

ATTACHMENTS

Electrical Services Bid Recommendation Letter

April 29, 2025

Ms. Lori Chapin, P.E.
Director of Engineering
Town of Highland Park
4700 Drexel Drive, Highland Park, TX 75205

RE: ***Electrical Services Bid (Bid No. 25-01-008-01)***

Ms. Chapin,

On April 22, 2025, the Town of Highland Park received bids for the Electrical Services Bid project. The following bids were received:

Bidder	**Base Bid**
Moonlighting, Inc.	$28,920.00

Kimley-Horn and Associates, Inc. (Kimley-Horn) has reviewed the bidder's qualifications. Moonlighting, Inc. has recently performed work in the Town. Thus, references were not requested. Kimley-Horn has no objections to awarding the contract to Moonlighting, Inc.

Enclosed is a copy of the Bid Tabulation for your reference. Should you have any questions or comments, please do not hesitate to contact us.

Sincerely,

Kimley-Horn and Associates, Inc.

Christian Noskin, P.E.

BID TABULATION
KIMLEY-HORN AND ASSOCIATES, INC.

Owner: **Town of Highland Park (Bid No. 25-01-008-01)**

Job No.:

Project: **Electrical Services Bid**

Date: **April 22, 2025**

BIDDER 1

Moonlighting, Inc.
2340 E Trinity Mills Rd. Ste 300
Carrollton, TX 75006

Item No.	Item Description	Quantity	Unit	Unit Price	Item Cost
BASE BID					
1	1ST HOUR JOURNEYMAN ELECTRICIAN (NORMAL WORK WEEK)	1	HR	$85.00	$85.00
2	JOURNEYMAN ELECTRICIAN 1 (OVERTIME: WEEKDAY NIGHTS, WEEKENDS AND HOLIDAYS)	1	HR	$127.50	$127.50
3	1ST HOUR JOURNEYMAN ELECTRICIAN PLUS TRUCK (OVERTIME: WEEKDAY NIGHTS, WEEKENDS AND HOLIDAYS)	1	HR	$127.50	$127.50
4	WEEKENDS, HOLIDAYS)	1	HR	$112.50	$112.50
5	JOURNEYMAN ELECTRICIAN 1 (NORMAL WORK WEEK)	1	HR	$85.00	$85.00
6	ADDITIONAL JOURNEYMAN ELECTRICIAN HOURLY LABOR (NORMAL WORK WEEK – ON SITE)	1	HR	$75.00	$75.00
7	SUPERVISION (JOURNEYMAN/MASTER) (OVERTIME: WEEKDAY NIGHTS, WEEKENDS, HOLIDAYS)	1	HR	$95.00	$95.00
8	APPRENTICE ELECTRICIAN (NORMAL WORK WEEK)	1	HR	$65.00	$65.00
9	APPRENTICE ELECTRICIAN (NIGHTS, WEEKENDS, HOLIDAYS)	1	HR	$97.50	$97.50
10	ADDITIONAL: MATERIALS (AT COST) PLUS MARK-UP	1	HR	$10.00	$10.00
11	JOURNEYMAN ELECTRICIAN 1 OVERTIME: WEEKDAY NIGHTS, WEEKENDS AND HOLIDAYS	1	HR	$127.50	$127.50
12	AND HOLIDAYS	1	HR	$127.50	$127.50
13A	PRICING FOR LANDMARK PECAN TREE (TOWN SUPPLIES LIGHTS)	1	LS	$8,500.00	$8,500.00
13B.1	PRICING FOR THE BEVERLY BRIDGE (BEVERLY AT LAKESIDE)	1	LS	$1,200.00	$1,200.00
13B.2	PRICING FOR THE EXALL BRIDGE (LAKESIDE AT LEXINGTON)	1	LS	$1,200.00	$1,200.00
13C.1	ONE LARGE LIVE OAK IN FRONT OF TOWN HALL	1	LS	$800.00	$800.00
13C.2	TWO CEDAR ELMS TREES IN FRONT OF TOWN HALL	1	LS	$2,950.00	$2,950.00
13C.3	ONE GINKO TREE IN FRONT OF DPS	1	LS	$1,500.00	$1,500.00
13C.4	ONE LIVE OAK ON LIBRARY SIDE	1	LS	$1,350.00	$1,350.00
13C.5	FOUR CRAPE MYRTLES IN FRONT OF TOWN HALL	1	LS	$1,200.00	$1,200.00
13C.6	ONE PECAN TREE AT ARMSTRONG/ARCADY	1	LS	$4,500.00	$4,500.00
13C.7	ONE PECAN TREE AT ARMSTRONG/DOUGLAS	1	LS	$4,500.00	$4,500.00
13D	HOLIDAY LIGHT INSTALLATION AS NEEDED	1	MAN/HOUR	$85.00	$85.00
TOTAL AMOUNT BID - BASE BID					**$28,920.00**

Town of Highland Park
Town Council
Tuesday, May 6, 2025

Item Coversheet

Take action approving a resolution to ratify the contract with Cole Construction Inc. for the emergency stormwater repair for Lakeside Drive.

PRESENTED BY: Lori Chapin, Director of Engineering

BACKGROUND:

Town staff reviewed the emergency repair for Armstrong/Lakeside/Preston at the Town Council Study Session meeting on February 18, 2025.

As you may recall, heavy rainfall and flooding caused a section of the storm drainage pipe to fail under the roadway near the Armstrong Avenue and Lakeside Drive intersection, creating a sinkhole. The affected portion of the roadway [see map] has remained closed.

Based on the data collected from the television inspection of the storm pipe upstream of the failure, it was determined that the pipe will need to be replaced from the outfall at Conner Lake to the inlet on the southwest corner of the Oak Lawn Avenue/Armstrong Parkway intersection. The existing pipe is clay tile and has longitudinal cracking and separated joints. A portion of the existing pipe is located below the island at Lakeside Drive and Armstrong Avenue and under the trees. This section of pipe will be abandoned in place. Please see the attached plan for the new route of the pipe and the additional improvements that will be constructed as part of this emergency repair.

Due to the emergency nature of the work, staff will be performing the work under the Texas Local Government Code Section 252.022(a)(2), which provides for procurements necessary to preserve or protect the public health or safety of the municipality's residents to be exempt from competitive bidding. A resolution has been prepared and attached for Town Council approval.

RECOMMENDATION

Staff recommend approval of the resolution ratifying the contract with Cole Construction Inc. for the emergency stormwater repair for Lakeside Drive.

FINANCIAL IMPACT

The cost to reconstruct the storm line is $343,500. Funding will be derived from the Capital Improvement Plan and may require a budget amendment.

ATTACHMENTS

Road Closure, Armstrong Ramp at Lakeside, 20250303_Armstrong Drainange Plans, 005.25
Resolution Ratifying Emergency Agreement REV SBT 2025.04.30

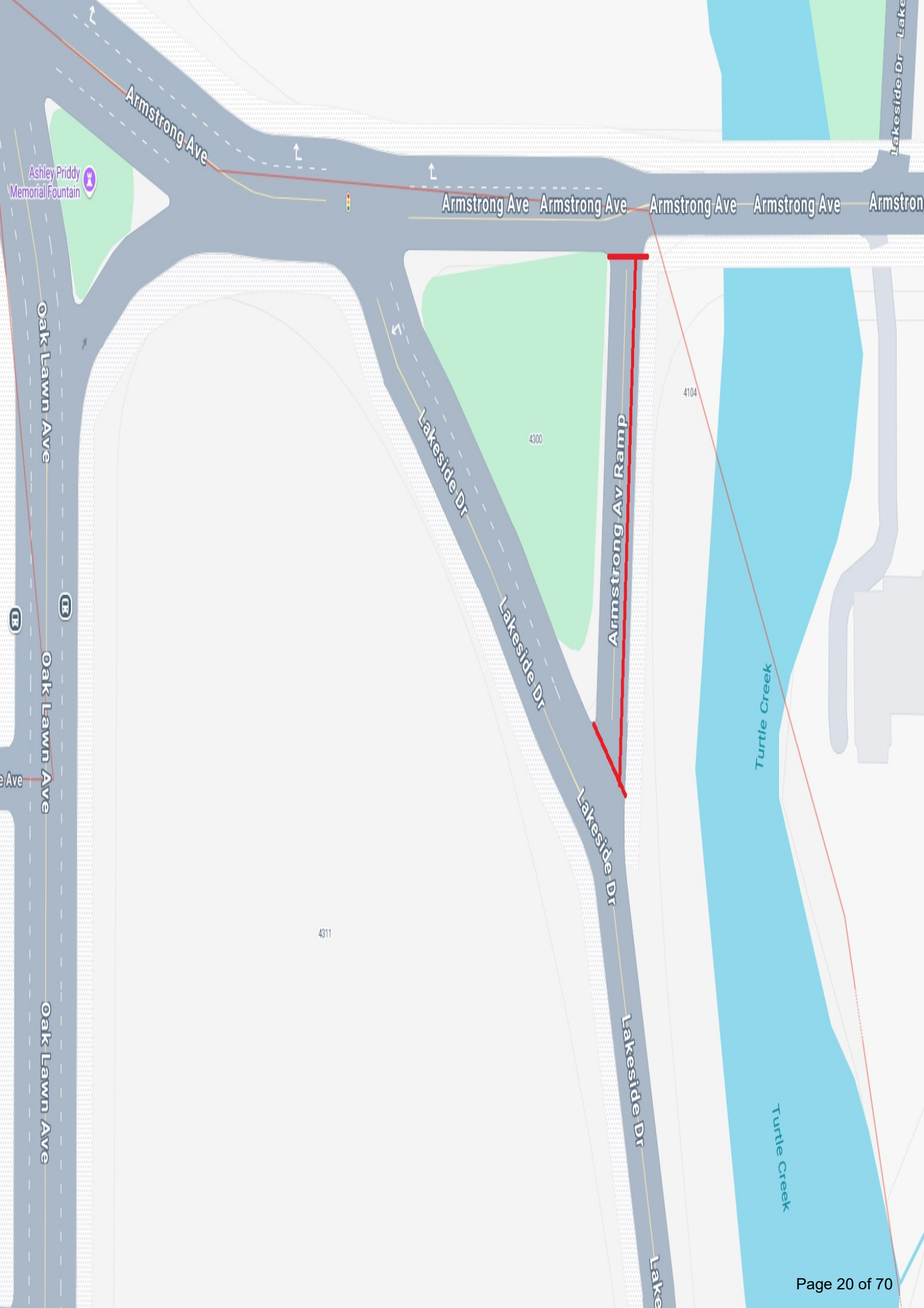
Armstrong Ave
Ashley Priddy Memorial Fountain
Armstrong Ave
Armstrong Ave
Armstrong Ave
Armstrong Ave
Lakeside Dr
Oak Lawn Ave
Oak Lawn Ave
Oak Lawn Ave
Lakeside Dr
Lakeside Dr
Lakeside Dr
Lakeside Dr
Armstrong Av Ramp
4300
4104
4311
Turtle Creek
Turtle Creek

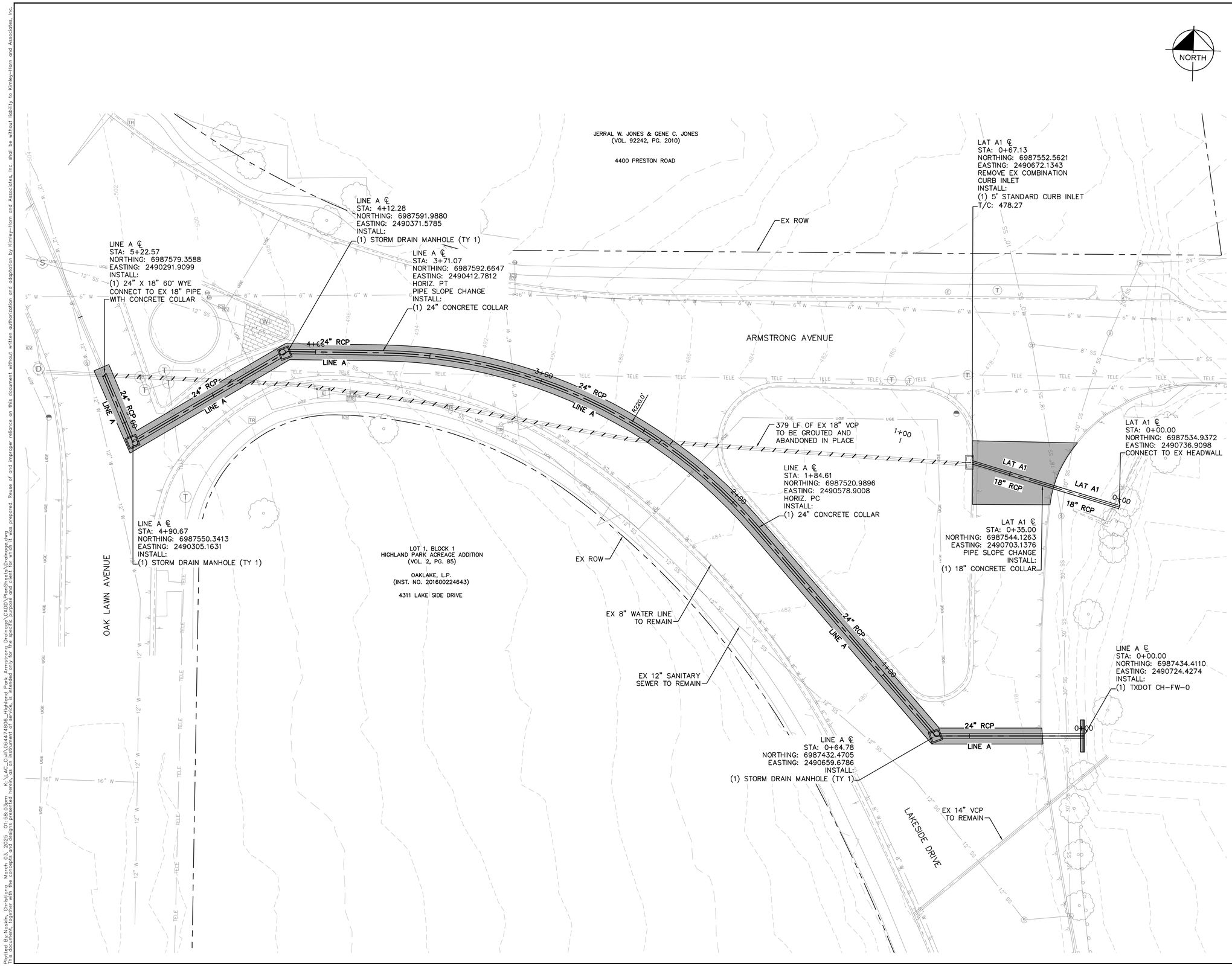

LEGEND

- EX ROW
- EX WATER
- EX 6" WATER
- EX 8" WATER
- EX 12" WATER
- EX SANITARY SEWER
- EX 8" SANITARY SEWER
- EX 12" SANITARY SEWER
- EX 18" SANITARY SEWER
- EX 30" SANITARY SEWER
- EX STORM DRAIN
- PROP STORM DRAIN
- EX UNDERGROUND ELECTRIC
- EX TELEPHONE
- EX GAS
- EX TREE TO REMAIN

NOTES:

1. ALL CONSTRUCTION, MATERIALS, AND WORKMANSHIP SHALL BE IN ACCORDANCE WITH THE TOWN OF HIGHLAND PARK DESIGN AND CONSTRUCTION STANDARDS AND THE 5TH EDITION OF THE NORTH CENTRAL TEXAS COUNCIL OF GOVERNMENTS (N.C.T.C.O.G.) STANDARD SPECIFICATIONS FOR PUBLIC WORKS CONSTRUCTION EXCEPT WHERE MODIFIED IN THE PLANS OR SPECIFICATIONS. TOWN OF HIGHLAND PARK DETAILS AND SPECIFICATIONS SUPERCEDE N.C.T.C.O.G. DETAILS AND SPECIFICATIONS. IF A DISCREPANCY EXISTS, THE PLANS AND SPECIFICATIONS SHALL GOVERN.
2. ALL CURB INLETS ARE LOCATED TO INSIDE FACE OF STRUCTURE WALL. SEE DETAILS FOR ADDITIONAL INFORMATION.
3. ALL REINFORCED CONCRETE PIPES (RCPs) USED SHALL BE CLASS III UNLESS OTHERWISE NOTED.
4. ALL CONNECTIONS TO EXISTING CONCRETE PIPE SHALL BE MADE WITH CONCRETE PIPE.
5. CONCRETE COLLARS SHALL BE CONSTRUCTED AT ALL PROPOSED PIPE TO EXISTING CONCRETE PIPE CONNECTIONS, AT ALL CONCRETE PIPE SIZE CHANGES, AT ALL CONCRETE PIPE PVIs AND AT ALL CONCRETE JOINTS WITH MORE THAN HALF PIPE TONGUE EXPOSURE.
6. THE EXISTENCE AND LOCATIONS OF ALL UNDERGROUND UTILITIES SHOWN ON THE DRAWINGS WERE OBTAINED FROM AVAILABLE RECORDS AND ARE APPROXIMATE. NEITHER THE OWNER NOR THE ENGINEER ASSUMES ANY RESPONSIBILITY FOR UTILITIES NOT SHOWN OR NOT IN THE LOCATION SHOWN. THE CONTRACTOR SHALL DETERMINE THE DEPTH AND LOCATION OF EXISTING UNDERGROUND UTILITIES PRIOR TO EXCAVATION AND SHALL BE REQUIRED TO TAKE ANY PRECAUTIONARY MEASURES TO PROTECT ALL LINES SHOWN AND/OR ANY OTHER UNDERGROUND UTILITIES NOT OF RECORD OR NOT SHOWN ON THE PLANS. CONTRACTOR SHALL BE RESPONSIBLE FOR CONTACTING ALL FRANCHISE AND TOWN UTILITIES PRIOR TO CONSTRUCTION.
7. ANY ADDITIONAL PIPE, FITTING, PLUGS, OR MATERIALS NOT SPECIFICALLY SHOWN IN THE PLANS, BUT NEEDED TO MAKE THE CONNECTIONS SHALL BE CONSIDERED SUBSIDIARY.
8. ALL PLUGS REQUIRED FOR STORM LINE REMOVAL SHALL BE SUBSIDIARY TO THE STORM DRAIN PIPE REMOVAL ITEM.
9. CONTRACTOR SHALL MAINTAIN POSITIVE DRAINAGE AND KEEP STORM RUNOFF IN DESIGNATED OUTFALL BASINS AT ALL TIMES.

No.	REVISIONS	DATE	BY

TOWN PROJECT NO. XX-XXX-XXXX-X

Kimley»Horn
225 E. JOHN W. CARPENTER FREEWAY, SUITE 1100,
IRVING, TX 75062
PHONE: 214-420-5600
WWW.KIMLEY-HORN.COM
© 2025 KIMLEY-HORN AND ASSOCIATES, INC.
TEXAS REGISTERED ENGINEERING FIRM F-928

03/03/2025
STATE OF TEXAS
CHRISTIANA NOSKIN
141093
LICENSED
PROFESSIONAL ENGINEER

KHA PROJECT	064474806
DATE	03/03/2025
SCALE	AS SHOWN
DESIGNED BY	CFN
DRAWN BY	TMC
CHECKED BY	CFN

TOWN OF HIGHLAND PARK
ARMSTRONG AVENUE STORM REPAIR

DRAINAGE
SYSTEM A
PLAN

SHEET NUMBER
1

Plotted By:Noskin, Christiana March 03, 2025 01:58:03pm K:\LAC_Dal\064474806 Highland Park Armstrong Drainage\CADD\Proj\Sheet\Drainage.dwg
This document, together with the concepts and designs presented herein, as an instrument of service, is intended only for the specific purpose and client for which it was prepared. Reuse of and improper reliance on this document without written authorization and adaptation by Kimley-Horn and Associates, Inc. shall be without liability to Kimley-Horn and Associates, Inc.

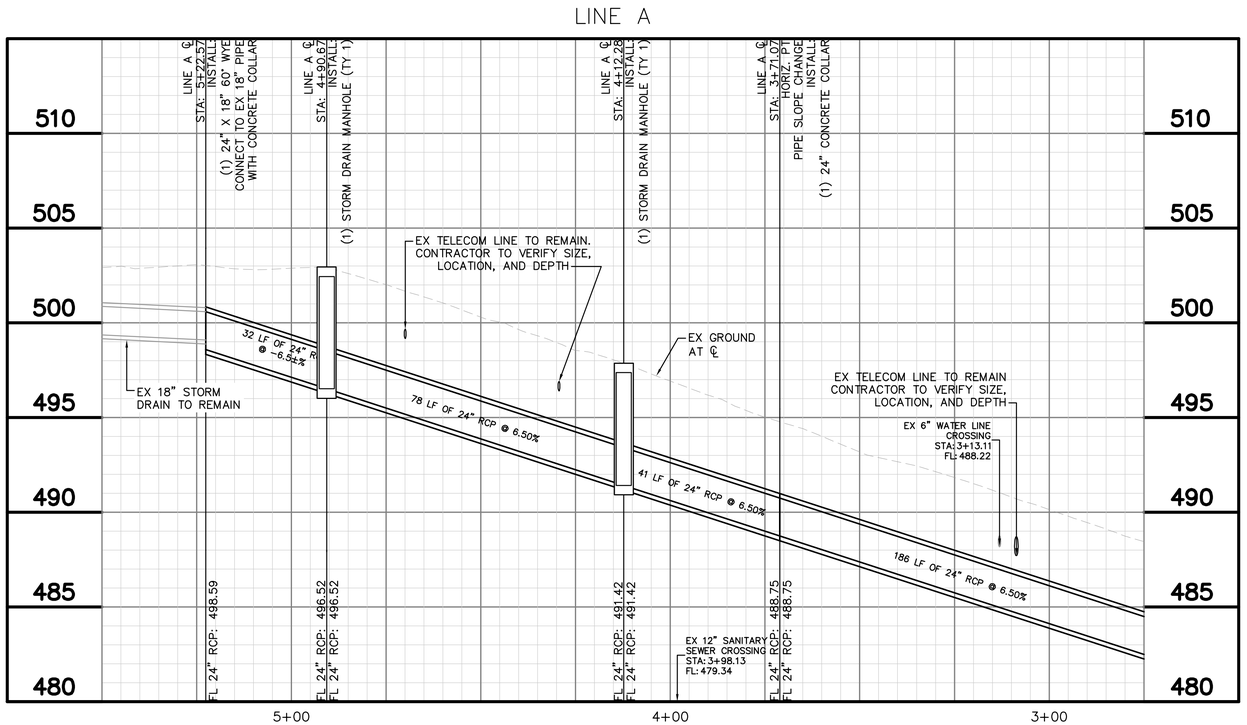

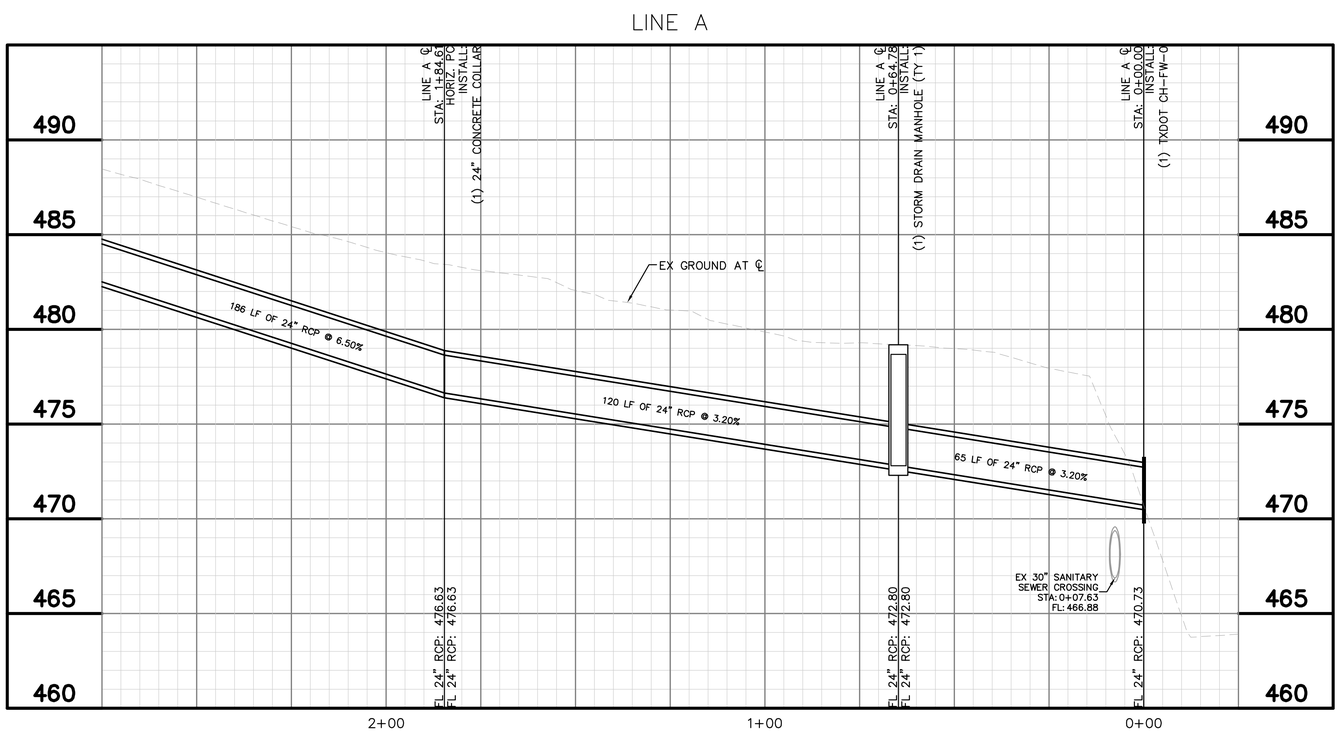

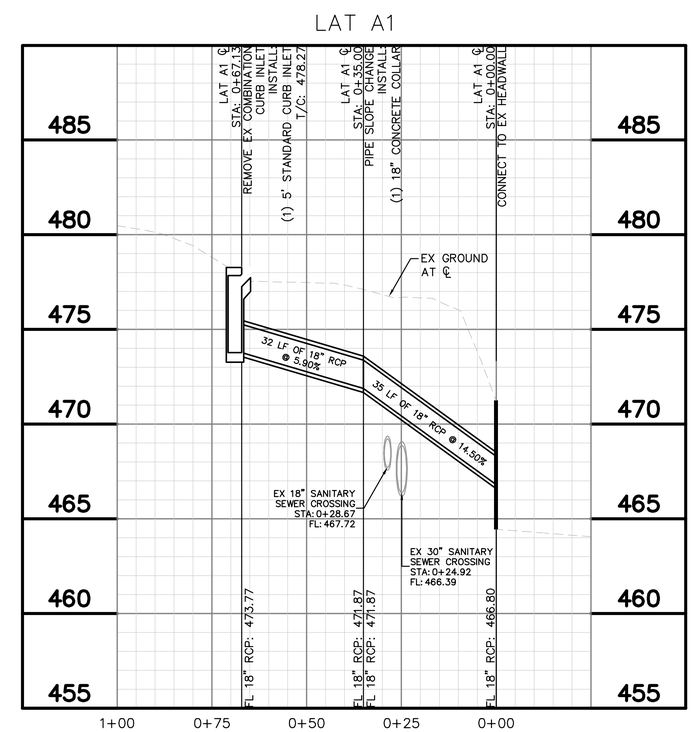

GRAPHIC SCALE IN FEET
0 10 20 40
HORIZONTAL

0 2 4 8
VERTICAL

No.	REVISIONS	DATE	BY

TOWN PROJECT NO. XX-XXX-XXXX-X

Kimley»Horn
225 E. JOHN W. CARPENTER FREEWAY, SUITE 1100,
IRVING, TX 75062
PHONE: 214-420-5600
WWW.KIMLEY-HORN.COM
© 2025 KIMLEY-HORN AND ASSOCIATES, INC.
TEXAS REGISTERED ENGINEERING FIRM F-928

03/03/2025
STATE OF TEXAS
CHRISTIANA NOSKIN
141093
LICENSED
PROFESSIONAL ENGINEER

KHA PROJECT 064474806
DATE 03/03/2025
SCALE AS SHOWN
DESIGNED BY CFN
DRAWN BY TMC
CHECKED BY CFN

TOWN OF HIGHLAND PARK
ARMSTRONG AVENUE STORM REPAIR

DRAINAGE
SYSTEM A
PROFILES

SHEET NUMBER
2

Plotted By:Noskin, Christiana March 03, 2025 01:54:57pm K:\LAC-Civil\064474806 -Highland Park Armstrong Drainage\CADD\Plan-Sheets\Drainage.dwg
This document, together with the concepts and designs presented herein, as an instrument of service, is intended only for the specific purpose and client for which it was prepared. Reuse of and improper reliance on this document without written authorization and adaptation by Kimley-Horn and Associates, Inc. shall be without liability to Kimley-Horn and Associates, Inc.

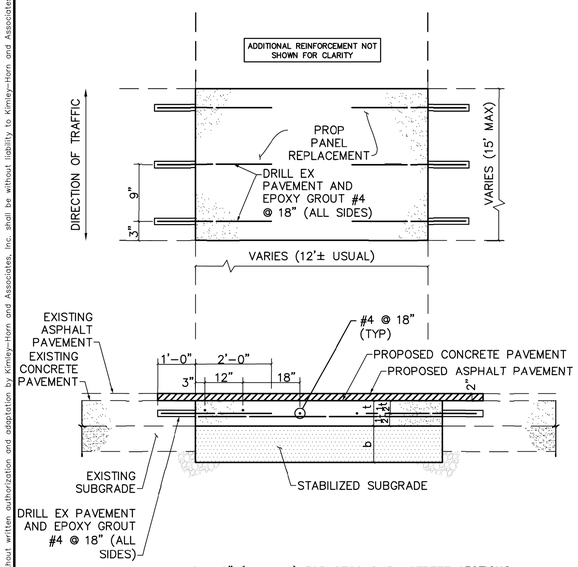

t = 6" (MINIMUM) FOR SECONDARY STREET SECTIONS
8" (MINIMUM) FOR PRIMARY STREET SECTIONS
(UNLESS OTHERWISE NOTED IN PLANS)
b = 12" FLEXIBLE BASE
(UNLESS OTHERWISE NOTED IN PLANS)

*ALLEYS SHALL HAVE JOINTS AT MAX SPACING OF 10'.

THE TOWN OF Highland Park TEXAS | STANDARD CONSTRUCTION DETAIL: EXISTING PAVEMENT REHAB FULL DEPTH (CONCRETE W/ HMAC OVERLAY) | DATE: APR 2022 | SD-02A

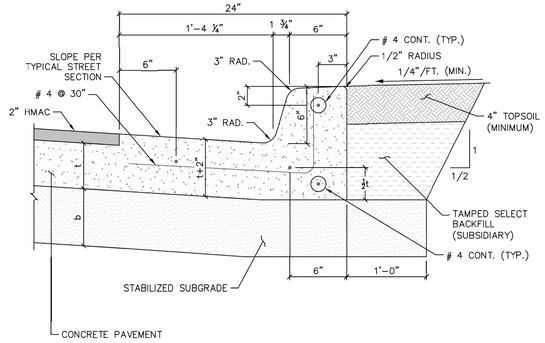

NOTE:

t = 6" (MINIMUM) FOR SECONDARY STREET SECTIONS
8" (MINIMUM) FOR PRIMARY STREET SECTIONS
(UNLESS OTHERWISE NOTED IN PLANS)
b = 12" FLEXIBLE BASE
(UNLESS OTHERWISE NOTED IN PLANS)

THE TOWN OF Highland Park TEXAS | STANDARD CONSTRUCTION DETAIL: INTEGRAL CONCRETE CURB (6") AND GUTTER (18") | DATE: APR 2022 | SD-04B

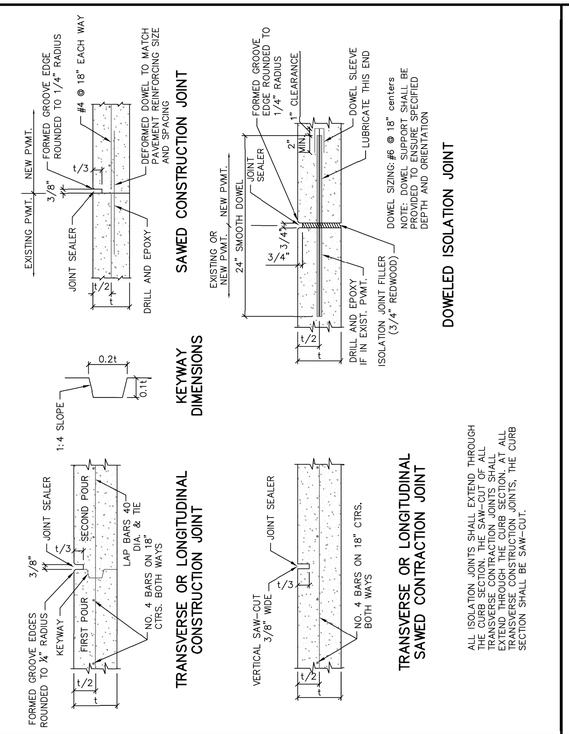

THE TOWN OF Highland Park TEXAS | STANDARD CONSTRUCTION DETAIL: CONCRETE PAVEMENT – JOINT DETAILS | DATE: JULY 2022 | SD-03B

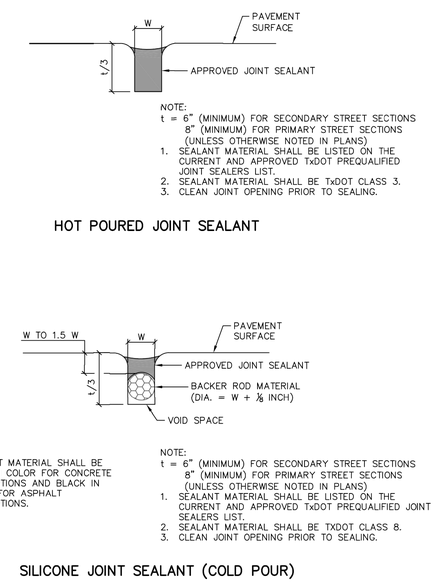

THE TOWN OF Highland Park TEXAS | STANDARD CONSTRUCTION DETAIL: CONCRETE PAVEMENT – JOINT SEALANTS | DATE: APR 2022 | SD-03C

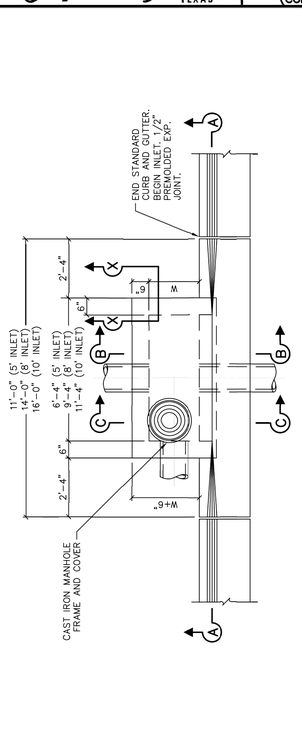

THE TOWN OF Highland Park TEXAS | STANDARD CONSTRUCTION DETAIL: STORM DRAIN INLET SECTION A–A | DATE: FEB 2020 | SD-10A

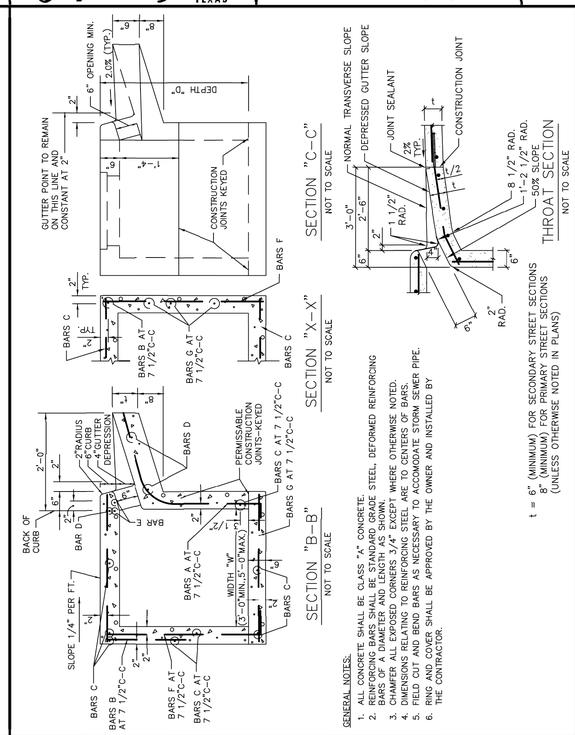

THE TOWN OF Highland Park TEXAS | STANDARD CONSTRUCTION DETAIL: STORM DRAIN INLET CROSS SECTION & INLET THROAT | DATE: FEB 2025 | SD-10B

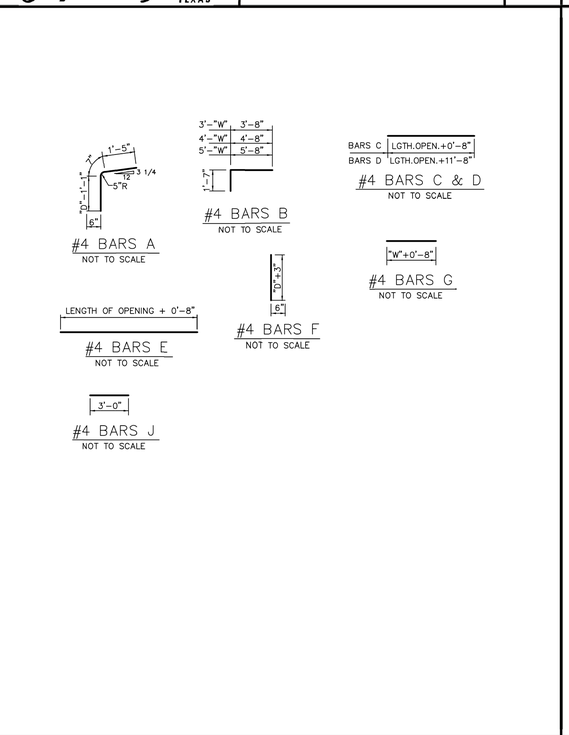

THE TOWN OF Highland Park TEXAS | STANDARD CONSTRUCTION DETAIL: STORM DRAIN INLET REBAR | DATE: FEB 2025 | SD-10C

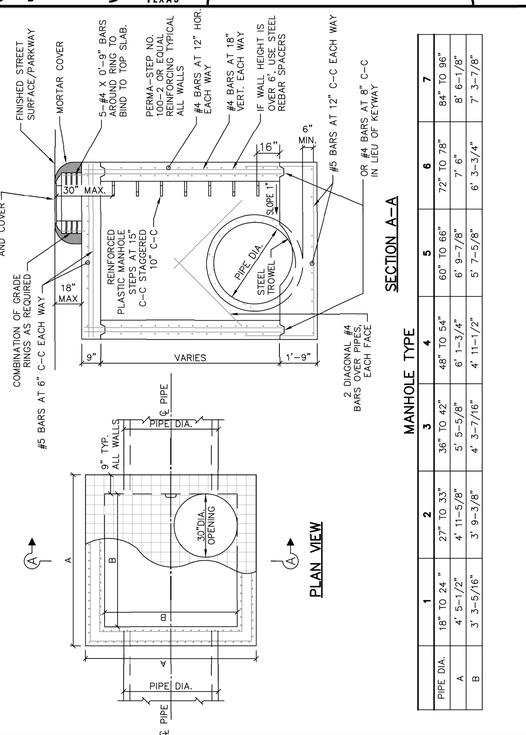

THE TOWN OF Highland Park TEXAS | STANDARD CONSTRUCTION DETAIL: STORM DRAIN MANHOLE (TYPES 1–7) | DATE: JAN 2023 | SD-12A

TOWN PROJECT NO. XX-XXX-XXXX-X

No.	REVISIONS	DATE	BY

Kimley»Horn
225 E. JOHN W. CARPENTER FREEWAY, SUITE 1100,
IRVING, TX 75062
PHONE: 214-420-5600
WWW.KIMLEY-HORN.COM
© 2025 KIMLEY-HORN AND ASSOCIATES, INC.
TEXAS REGISTERED ENGINEERING FIRM F-928

03/03/2025
STATE OF TEXAS
CHRISTIANA NOSKIN
141093
LICENSED
PROFESSIONAL ENGINEER

KHA PROJECT	064474806
DATE	03/03/2025
SCALE	AS SHOWN
DESIGNED BY	CFN
DRAWN BY	TMC
CHECKED BY	CFN

TOWN OF HIGHLAND PARK
ARMSTRONG AVENUE
STORM REPAIR

DRAINAGE DETAILS
SHEET 1 OF 2

SHEET NUMBER
3

Rights to Ownership, Copyright, Reuse of and improper reliance on this document without written authorization and adaptation by Kimley-Horn and Associates, Inc. shall be without liability to Kimley-Horn and Associates, Inc.
This document, together with the concepts and designs presented herein, as an instrument of service, is intended only for the specific purpose and client for which it was prepared.

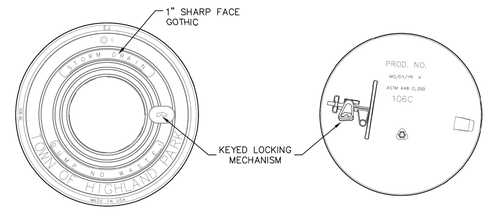

ASSEMBLY

BOTTOM VIEW OF COVER

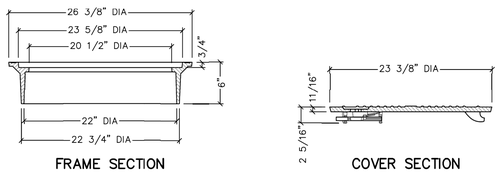

FRAME SECTION

COVER SECTION

MANUFACTURER	REFERENCE NUMBER	APPROX. WEIGHT
EAST JORDAN	106-6C	175 lb
BASS & HAYS	226	175 lb
*OR APPROVED EQUAL		

NON-TRAFFIC RATED LOCKING

NOT TO SCALE

NOTE:

1. MANHOLE FRAME AND COVER MAY BE CAST IRON OR COMPOSITE AS SPECIFIED IN THE PLANS. CAST IRON IS SHOWN ABOVE. FOR COMPOSITE FRAME AND COVER REFERENCE WS-19.

THE TOWN OF Highland Park TEXAS	STANDARD CONSTRUCTION DETAIL	DATE:
	STORM DRAIN INLET MANHOLE COVER AND FRAME COVER AND FRAME	FEB 2025 SD-13A

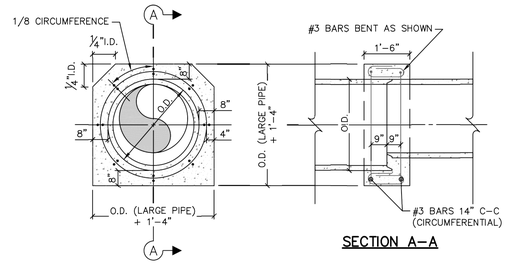

SECTION A-A

REINFORCED CONCRETE COLLAR

NOT TO SCALE

NOTE: COLLARS MAY ONLY BE USED TO REDUCE THE DIAMETER ONE PIPE SIZE. A JUNCTION BOX IS REQUIRED FOR REDUCING MORE THAN ONE PIPE SIZE.

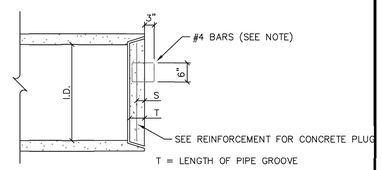

REINFORCED CONCRETE PIPE PLUG

NOT TO SCALE

PIPE SIZE	REINF. BAR	DISTANCE C-C BOTH WAYS	S
18"-33"	# 3	12"	1/2 T
36"-54"	# 3	12"	1/3 T
60"-84"	# 4	12"	1/4 T

NOTE: STEEL HANDLE FOR REINFORCED CONCRETE PIPE PLUG SHALL BE LOCATED 1/4 I.D. ABOVE CENTER POINT OF PLUG. TWO (2) STEEL HANDLES WILL BE REQUIRED ON PLUGS OF 36" DIA. PIPES OR LARGER AND SHALL BE PLACED 1/4 I.D. APART AND 1/4 I.D ABOVE CENTER OF PLUG.

THE TOWN OF Highland Park TEXAS	STANDARD CONSTRUCTION DETAIL	DATE:
	REINFORCED CONCRETE COLLAR AND MISC. DETAILS	FEB 2025 SD-15

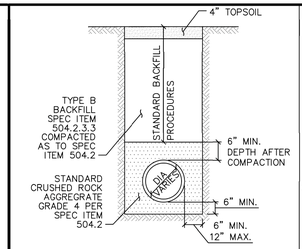

UNPAVED AREA

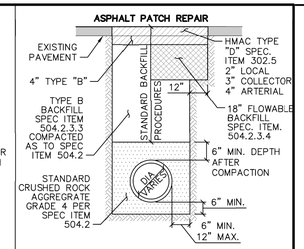

NOTE: FOR NEW STREETS, BACKFILL MAY BE EXTENDED TO THE TOP OF THE TRENCH

ASPHALT PAVEMENT

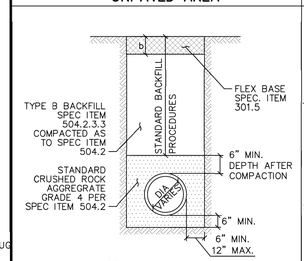

GRAVEL SURFACE

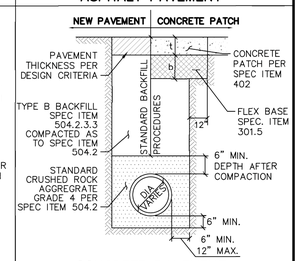

CONCRETE PAVEMENT

NOTE:

1. ALL SPEC. ITEM NUMBER REFERENCES SHALL REFERENCE NCTCOG STANDARD SPECIFICATIONS FOR PUBLIC WORKS CONSTRUCTION.
2. AT THE END OF EACH WORK DAY ALL SPOILS SHALL BE REMOVED FROM THE CITY R.O.W. UNLESS PRIOR WRITTEN PERMISSION IS OBTAINED FROM THE CITY TO STORE SPOILS IN DESIGNATED SPOIL STORAGE AREAS THAT DO NOT OBSTRUCT AUTOMOBILE OR PEDESTRIAN TRAFFIC.
3. ALL BACKFILL SHALL BE PER SPEC. ITEM 504 AND SHALL BE COMPACTED PER SPEC. ITEM. 504. ROCKS GREATER THAN 4" IN DIA. SHALL BE REMOVED FROM ANY NATIVE MATERIAL USED AS BACKFILL.
4. ALL PAVEMENT SHALL BE REMOVED ALONG NEAT SAW CUT LINES PER SPEC. ITEM 402.3.
5. A MAXIMUM OF 200 FT. OF OPEN TRENCH WILL BE ALLOWED AT ANY TIME, UNLESS APPROVED BY THE CITY ENGINEER.
6. IN SANDY SOILS, THE CRUSHED ROCK EMBEDMENT SHALL BE WRAPPED IN A FILTER FABRIC.
7. TOPSOIL SHALL BE 4 INCHES IN DEPTH AND SHALL BE LOOSE AND FREE OF ROCKS OR CLODS GREATER THAN 1/4" IN DIAMETER. ALL TOPSOIL SHALL BE APPROVED BY THE CITY PRIOR TO INSTALLATION.

t = 6" (MINIMUM) FOR SECONDARY STREET SECTIONS
8" (MINIMUM) FOR PRIMARY STREET SECTIONS
(UNLESS OTHERWISE NOTED IN PLANS)

b = 12" FLEXIBLE BASE
(UNLESS OTHERWISE NOTED IN PLANS)

THE TOWN OF Highland Park TEXAS	STANDARD CONSTRUCTION DETAIL	DATE:
	EMBEDMENT, BACKFILL, PAVEMENT REPAIR FOR STORM DRAIN	APR 2022 SD-17A

No.	REVISIONS	DATE	BY

Kimley»Horn
225 E. JOHN W. CARPENTER FREEWAY, SUITE 1100,
IRVING, TX 75062
PHONE: 214-420-5600
WWW.KIMLEY-HORN.COM

© 2025 KIMLEY-HORN AND ASSOCIATES, INC.
TEXAS REGISTERED ENGINEERING FIRM AF-928

03/03/2025

STATE OF TEXAS
CHRISTIANA NOSKIN
141093
LICENSED
PROFESSIONAL ENGINEER

KHA PROJECT 064474806
DATE 03/03/2025
SCALE AS SHOWN
DESIGNED BY CFN
DRAWN BY TMC
CHECKED BY CFN

TOWN OF HIGHLAND PARK
ARMSTRONG AVENUE
STORM REPAIR

DRAINAGE DETAILS
SHEET 2 OF 2

SHEET NUMBER
4

TOWN PROJECT NO. XX-XXX-XXXX-X

Plotted By:Noskin, Christiana, March 03, 2025 01:03:22pm K:\LAC_Civil\064474806 Highland Park Armstrong Drainage\CADD\PlanSheets\Drainage.dwg
This document, together with the concepts and designs presented herein, as an instrument of service, is intended only for the specific purpose and client for which it was prepared. Reuse of and improper reliance on this document without written authorization and adaptation by Kimley-Horn and Associates, Inc. shall be without liability to Kimley-Horn and Associates, Inc.

RESOLUTION NO. 005-25

A RESOLUTION OF THE TOWN COUNCIL OF THE TOWN OF HIGHLAND PARK, TEXAS RATIFYING AN AGREEMENT BETWEEN THE TOWN OF HIGHLAND PARK AND COLE CONSTRUCTION, INC. FOR THE EMERGENCY STORMWATER REPAIR; MAKING FINDINGS EXEMPTING SUCH CONTRACT FROM THE REQUIREMENTS OF COMPETITIVE BIDDING; AND PROVIDING AN EFFECTIVE DATE.

WHEREAS**,** on or around February 1, 2025, heavy rainfall and flooding caused a section of storm drainage pipe to fail under Lakeside Drive, located in the Town of Highland Park (the "Town"), and such failure required emergency stormwater repairs; and

WHEREAS, Texas Local Government Code Section 252.022(a)(2) provides that procurements necessary to preserve or protect the public health or safety of the municipality's residents are exempt from competitive bidding; and

WHEREAS**,** the Town Council finds it was necessary for the Town to enter into an emergency agreement for the repair of the stormwater system under Lakeside Drive without the delay of competitive bidding to preserve and protect the health and safety of Town residents.

NOW THEREFORE, BE IT RESOLVED by the Town Council of the Town of Highland Park, Texas:

SECTION 1. That the findings and premises contained in the WHEREAS clauses above are hereby deemed to be true and correct and incorporated as a part of this Resolution for all purposes. The Town Council specifically finds that the above stated conditions existed in Lakeside Drive, that it was necessary for staff to procure emergency repairs to the stormwater system, and that this procurement was not subject to the competitive bidding requirements of Chapter 252 of the Local Government Code because it was necessary to preserve and protect the public health and safety of the Citizens of the Town.

SECTION 2. That the Agreement, attached hereto as **Exhibit A,** executed by Town staff for the emergency repairs and the expenditure of $343,500 for the services provided by Cole Construction, Inc. are hereby ratified and approved.

SECTION 3. This Resolution shall become effective from and after its date of passage in accordance with law.

PASSED AND APPROVED by the Highland Park Town Council on this 6th day of May 2025.

APPROVED AS TO FORM:

Susan Thomas
Town Attorney

APPROVED:

Will C. Beecherl
Mayor

ATTEST:

Joanna Mekeal
Town Secretary

Exhibit A to Resolution

Cole Construction Agreement

CONSTRUCTION CONTRACT
TOWN OF HIGHLAND PARK
CONTRACT NO. 2025-10-005-4506-03

STATE OF TEXAS	§	
	§	**KNOW ALL MEN BY THESE PRESENTS:**
COUNTY OF DALLAS	§	

THIS CONTRACT is made and entered into on the date fully executed, by and between the **TOWN OF HIGHLAND PARK, TEXAS**, a municipal corporation, of the County of Dallas and State of Texas, hereinafter termed the OWNER, and **Cole Construction Inc.**, a Texas [type of corporation] located at 10315 Alta Vista Road, Fort Worth, TX 76244, hereinafter termed the CONTRACTOR.

WITNESSETH: That for and in consideration of the mutual covenants hereinafter set forth, the OWNER and CONTRACTOR agree as follows:

I. DESCRIPTION OF WORK

The CONTRACTOR shall perform all of the work as specified in the contract documents such work generally described as:

ARMSTRONG AVENUE DRAINAGE REPAIRS2025-10-005-4506-03

Plans and specifications prepared by:

Town of Highland Park Engineering Department and Kimley-Horn and Associates, Inc.

All extra Work shall be performed as specified or indicated in the Contract Documents; and, at the CONTRACTOR'S own cost and expense, the CONTRACTOR shall furnish all the materials, supplies, machinery, equipment, tools, superintendence, labor, insurance, and other accessories and services as may be necessary in order to complete the construction, as described above and in accordance with the Contract Documents unless otherwise agreed to by the OWNER.

II. CONTRACT DOCUMENTS

The Contract Documents shall consist of the following:

1. this Contract, including addenda thereto and properly authorized change orders;
2. Town of Highland Park Insurance Requirements (attached hereto as **Exhibit A, "Required Insurance and Proof of Insurance"**);
3. the Standard Specifications for Public Works Construction (North Central Texas Fifth Edition November 2017), as may be amended (herein referred to as "Standard Specifications" or "General Provisions"), except as otherwise modified herein;
4. Town of Highland Park supplements to the Standards Specifications (attached hereto as "**Section 3 – Supplemental Provisions**");
5. Town of Highland Park amendments to the Standard Specifications (attached hereto as **Section 4 – Special Conditions**);
6. Town of Highland Park written notice to proceed to the CONTRACTOR;
7. the CONTRACTOR'S bid proposal/proposal attached hereto in **Section 1 – Bid Requirements**;

8. a Performance Bond in the sum of ONE HUNDRED PERCENT (100%) of the total Contract price, which Bond shall be in a form acceptable to the OWNER, shall guarantee the work in accordance with the plans and specifications for a period of two (2) year after acceptance by the OWNER, and shall provide for repair or replacement of all defects due to faulty material and/or workmanship that appear within a period of two (2) years from the date of acceptance by the OWNER;
9. a Payment Bond in the sum of ONE HUNDRED PERCENT (100%) of the total Contract price; and
10. any other documents identified as pertaining to this Contract, all of which have been identified by the OWNER and the CONTRACTOR and attached hereto; and
11. any other bid materials distributed by the OWNER that relate to the project.

These above Contract documents constitute the entire agreement between the OWNER and CONTRACTOR, and all are fully incorporated herein. The Contract documents are complementary and what is called for by one shall be as binding as if called for by all. In the event of an inconsistency in any of the provisions of the Contract documents, the inconsistency shall be resolved by giving precedence to the Contract documents in the order in which they are listed above. The Contract may be altered, amended or modified only as provided herein. These Contract Documents supersede all oral or written previous contemporaneous agreements between the parties relating to matters in this Contract.

III. TIME OF COMMENCEMENT, COMPLETION AND LIQUIDATED DAMAGES

The CONTRACTOR shall perform and complete all the items of Work listed and referred to in the Contract Documents on an as-needed basis as directed by the OWNER. Contract time for tasks shall be agreed upon between the OWNER and the CONTRACTOR on an individual project basis. If an agreed upon schedule cannot be reached the OWNER reserves the right to enter into an Agreement with another qualified CONTRACTOR to meet the schedule needed. All limitations of time set forth herein are material and are of the essence of this Contract. It is understood by the CONTRACTOR and OWNER that actual damages caused by the failure of the CONTRACTOR to complete the work within the stated time are impractical or extremely difficult to fix or ascertain, and that per diem deduction from the Contract price shall be retained by the OWNER as payment by the CONTRACTOR of liquidated damages, and not as penalty for such failure. Such liquidated damages to be assessed and retained are set forth in the Standard Specifications.

IV. CONTRACT PRICE AND TERM

The OWNER shall pay the CONTRACTOR for the performance of the work, subject to additions and deductions by change order or as otherwise provided in the provisions of this Contract, which has been procured in compliance with the Texas Local Government Code, Texas Government Code and the Texas Tax Code, a total sum not to exceed **Three Hundred Forty-Three Thousand Five Hundred Dollars 00/100 ($343,500.00)** in accordance with the Contract Documents. OWNER shall pay CONTRACTOR using current funds, and such payments shall be subject to the Supplemental Provisions and Standards Specifications, as contained in the Contract Documents. CONTRACTOR shall be paid for actual work performed on the basis of the unit prices in the Bid Proposal.

V. DEBTS

The OWNER may, at is option, offset any amounts due and payable under this Contract against any debt (including taxes) lawfully due to OWNER from CONTRACTOR, regardless of whether the amount due arises pursuant to the terms of this Contract or otherwise and regardless of whether or not the debt due to OWNER has been reduced to judgment by a court.

VI. CONTRACT ADMINISTRATION

This Contract shall be administered on behalf of the OWNER by its Director of Engineering or their designee (referred to herein as "OWNER Representative") and the CONTRACTOR shall fully comply with any and all instructions from said OWNER Representative. With execution and delivery of the Contract, the CONTRACTOR shall furnish and file with the OWNER in the amounts herein required a maintenance bond in the amount of **100 percent** of the Contract and performance and payment bonds in accordance with the provisions of V.T.C.A. Government Code, Chapter 2253 if this is a public work contract in excess of fifty thousand dollars ($50,000.00). If this Contract is renewed for one or more additional terms, in accordance with Section IV above, OWNER may require CONTRACTOR to renew or provide additional bonds.

VII. LABOR CLASSIFICATION AND MINIMUM WAGE SCALE

The CONTRACTOR is required to follow all provisions of Chapter 2258 of the Texas Government Code in the hiring and payment of all skilled and unskilled labor used on this contract. The CONTRACTOR must pay the wage rate determined by the U.S. DOL to be the prevailing wage under the Davis/Bacon Act.

VIII. CONTRACTOR REPRESENTATIONS & CERTIFICATIONS

A. In order to induce OWNER to enter into this Contract, CONTRACTOR makes the following representations:

1. CONTRACTOR has examined and carefully studied the Contract Documents, including Addenda.

2. CONTRACTOR has visited the Site, conducted a thorough visual examination of the Site and adjacent areas, and become familiar with the general, local, and Site conditions that may affect cost, progress, and performance of the Work.

3. CONTRACTOR is familiar with all Laws and Regulations that may affect cost, progress, and performance of the Work.

4. CONTRACTOR has carefully studied the reports of explorations and tests of subsurface conditions at or adjacent to the Site and the drawings of physical conditions relating to existing surface or subsurface structures at the Site that have been identified in the Supplementary Conditions, with respect to the Technical Data in such reports and drawings.

5. CONTRACTOR has carefully studied the reports and drawings relating to Hazardous Environmental Conditions, if any, at or adjacent to the Site that have been identified in the Supplementary Conditions, with respect to Technical Data in such reports and drawings.

6. CONTRACTOR has considered the information known to CONTRACTOR itself; information commonly known to contractors doing business in the locality of the Site;

information and observations obtained from visits to the Site; the Contract Documents; and the Technical Data identified in the Supplementary Conditions or by definition, with respect to the effect of such information, observations, and Technical Data on (a) the cost, progress, and performance of the Work; (b) the means, methods, techniques, sequences, and procedures of construction to be employed by CONTRACTOR; and (c) CONTRACTOR'S safety precautions and programs.

7. Based on the information and observations referred to in the preceding paragraph, CONTRACTOR agrees that no further examinations, investigations, explorations, tests, studies, or data are necessary for the performance of the Work at the Contract Price, within the Contract Times, and in accordance with the other terms and conditions of the Contract.

8. CONTRACTOR is aware of the general nature of work to be performed by OWNER and others at the Site that relates to the Work as indicated in the Contract Documents.

9. CONTRACTOR has given OWNER written notice of all conflicts, errors, ambiguities, or discrepancies that CONTRACTOR has discovered in the Contract Documents, and of discrepancies between Site conditions and the Contract Documents, and the written resolution thereof by OWNER is acceptable to CONTRACTOR.

10. The Contract Documents are generally sufficient to indicate and convey understanding of all terms and conditions for performance and furnishing of the Work.

11. CONTRACTOR'S entry into this Contract constitutes an incontrovertible representation by CONTRACTOR that without exception all prices in the Agreement are premised upon performing and furnishing the Work required by the Contract Documents.

B. CONTRACTOR certifies that it has not engaged in corrupt, fraudulent, collusive, or coercive practices in competing for or in executing the Contract. For the purposes of this Paragraph VIIB:

1. "corrupt practice" means the offering, giving, receiving, or soliciting of anything of value likely to influence the action of a public official in the bidding process or in the Contract execution;

2. "fraudulent practice" means an intentional misrepresentation of facts made (a) OWNER influence the bidding process or the execution of the Contract to the detriment of OWNER, (b) to establish Bid or Contract prices at artificial non-competitive levels, or (c) to deprive OWNER of the benefits of free and open competition;

3. "collusive practice" means a scheme or arrangement between two or more Bidders, with or without the knowledge of OWNER, a purpose of which is to establish Bid prices at artificial, non-competitive levels; and

4. "coercive practice" means harming or threatening to harm, directly or indirectly, persons or their property to influence their participation in the bidding process or affect the execution of the Contract.

IX. DISCLOSURE OF CONFLICTS OF INTEREST AND COMPLIANCE WITH OTHER APPLICABLE LAWS

The CONTRACTOR shall at all times observe and comply with all Federal, State and local laws, ordinances and regulations including all amendments and revisions thereto, which in any manner affect the CONTRACTOR or the services and/or items to be provided, specifically and not limited to any ethics laws. In particular, the CONTRACTOR is put on notice that the OWNER will require the CONTRACTOR to comply with Chapter 176 of the Texas Local Government Code by completing the attached Conflict of Interest questionnaire (FORM CIQ) and returning the completed FORM CIQ to the OWNER. Additionally, CONTRACTOR must comply with Section 2252.908 of the Texas Government Code, as amended , providing that a governmental entity may not enter into certain contracts with a business entity on or after January 1, 2016, unless the business entity submits a disclosure of interested parties (FORM 1295) to the governmental entity at the time the business entity submits the signed contract to the governmental entity. Further information regarding the disclosure of interested parties' law and instructions on filing FORM 1295 can be found at the Texas Ethics Commission web site at the following web address:

https://www.ethics.state.tx.us/filinginfo/1295/

X. AMENDMENT

This agreement may not be modified, altered or changed except in writing and signed by both parties wherein specific reference is made to this agreement.

XI. CHOICE OF LAW, VENUE AND CONTRACT INTEPRETATION

The obligations of the Parties to this Contract shall be performable in Dallas County, Texas, and if legal action is necessary in connection with or to enforce rights under this Contract, exclusive venue shall lie in Dallas County, Texas

This Contract shall be governed by and construed in accordance with the laws and court decisions of the State of Texas, without regard to conflict of law principles of Texas or any other State. Although this Contract is drafted by the OWNER, should any part be in dispute, the parties agree this Contract shall not be construed more favorably for either Party.

XII. SEVERABILITY

If any part of this Contract shall be stricken for any reason whatsoever or found to be invalid or unenforceable, that part will be severed, and the remainder of this Contract will continue in full force and effect.

XIII. SURVIVAL

Any liabilities or obligations of a Party for acts or omissions prior to the cancellation or termination of this Contract, and any other provisions of this Contract which, by their terms, are contemplated to survive (or to be performed after) termination of this Contract, shall survive cancellation or termination thereof.

XIV. MISCELLANEOUS

Notwithstanding anything to the contrary contained in this Agreement, the below certifications and verifications contained in this Section XII shall survive termination of this Agreement until the applicable statute of limitations has run.

A. Anti-Boycott Verification. The CONTRACTOR hereby verifies that it and its parent company, wholly- or majority-owned subsidiaries, and other affiliates, if any, do not boycott Israel and will not boycott Israel during the term of this Agreement. The foregoing verification is made pursuant to Section 2271.002, Texas Government Code. As used in the foregoing verification, "boycott Israel" means refusing to deal with, terminating business activities with, or otherwise taking any action that is intended to penalize, inflict economic harm on, or limit commercial relations specifically with Israel, or with a person or entity doing business in Israel or in an Israeli-controlled territory, but does not include an action made for ordinary business purposes. The CONTRACTOR understands "affiliate" to mean an entity that controls, is controlled by, or is under common control with the CONTRACTOR and exists to make a profit. Notwithstanding anything contained herein, the representations and covenants contained in this Section, "Anti-Boycott Verification," shall survive termination of this Agreement until the statute of limitations has run.

B. Iran, Sudan and Foreign Terrorist Organizations. The CONTRACTOR represents that neither it nor any of its parent company, wholly- or majority-owned subsidiaries, and other affiliates is a company identified on a list prepared and maintained by the Texas Comptroller of Public Accounts under Section 2252.153 or Section 2270.0201, Texas Government Code. The foregoing representation is made pursuant to Section 2252.152, Texas Government Code, and excludes the Contractor and its parent company, wholly- or majority-owned subsidiaries, and other affiliates, if any, that the United States government has affirmatively declared to be excluded from its federal sanctions regime relating to Sudan or Iran or any federal sanctions regime relating to a foreign terrorist organization. The CONTRACTOR understands "affiliate" to mean any entity that controls, is controlled by, or is under common control with the CONTRACTOR and exists to make a profit. Notwithstanding anything contained herein, the representations and covenants contained in this Section, "Iran, Sudan and Foreign Terrorist Organizations," shall survive termination of the Agreement until the statute of limitations has run.

C. Verifications Pursuant to Chapter 2276, Texas Government Code. The CONTRACTOR hereby verifies that it and its parent companies, wholly- or majority- owned subsidiaries, and other affiliates, if any, do not boycott energy companies and will not boycott energy companies during the term of this Agreement. The foregoing verification is made pursuant to Section 2276.002, Texas Government Code, as amended. As used in the foregoing verification, "boycott energy companies" shall have the meaning assigned to the term "boycott energy company" in Section 809.001, Texas Government Code. The CONTRACTOR understands "affiliate" to mean an entity that controls, is controlled by, or is under common control with the CONTRACTOR and exists to make a profit. Notwithstanding anything contained herein, the representations and covenants contained in this Section, "Verifications Pursuant to Chapter 2276, Texas Government Code," shall survive termination of the Agreement until the statute of limitations has run

D. Verification Pursuant to Chapter 2274, Texas Government Code.

The CONTRACTOR hereby verifies that it and its parent company, wholly- or majority-owned subsidiaries, and other affiliates, if any:

(1) do not have a practice, policy, guidance or directive that discriminates against a firearm entity or firearm trade association; and.

(2) will not discriminate during the term of this Agreement against a firearm entity or firearm trade association during the term of this Agreement.

The foregoing verification is made pursuant to Section 2274.002, Texas Government Code, as amended. As used in the foregoing verification, "discriminate against a firearm entity or firearm trade association" shall have the meaning assigned to such term in Section 2274.001(3), Texas Government Code, "firearm entity" shall have the meaning assigned to such term in Section 2774.001(6), Texas Government Code, and "firearm trade association" shall have the meaning assigned to such term in Section 2274.001(7), Texas Government Code. The CONTRACTOR understands "affiliate" to mean an entity that controls, is controlled by, or is under common control with the CONTRACTOR and exists to make a profit. Notwithstanding anything contained herein, the representations and covenants contained in this Section, Verification Pursuant to Chapter 2274, Texas Government Code", shall survive termination of the Agreement until the statute of limitations has run.

E. Form 1295. Submitted herewith is a completed Form 1295 generated by the Texas Ethics Commission's (the "TEC") electronic filing application in accordance with the provisions of Section 2252.908 of the Texas Government Code and the rules promulgated by the TEC (the "Form 1295"). The OWNER hereby confirms receipt of the Form 1295 from the CONTRACTOR, and the OWNER agrees to acknowledge such form with the TEC through its electronic filing application not later than the 30th day after the receipt of such form. The Parties understand and agree that, with the exception of information identifying the OWNER and the contract identification number, neither the OWNER nor its consultants are responsible for the information contained in the Form 1295; that the information contained in the Form 1295 has been provided solely by the CONTRACTOR; and, neither the OWNER nor its consultants have verified such information.

XV. AUTHORITY TO SIGN

The undersigned officers and/or agents of the parties hereto are the properly authorized officials and have the necessary authority to execute this Contract on behalf of the parties hereto.

IN WITNESS WHEREOF, the OWNER and CONTRACTOR have executed this Contract in the year and day fully executed below (the "Effective Date").

[Signatures on Page following]

OWNER:

TOWN OF HIGHLAND PARK

Tobin E. Maples

Printed/Typed Name

Town Administrator

Title

Lori Chapin

Attest

CONTRACTOR:

COLE CONSTRUCTION INC.

Kenneth Thorne

Printed/Typed Name

President

Title

Attest

(CORPORATE SEAL)

Address for giving notices:

Town Administrator's Office
4700 Drexel Dr.
Highland Park, Texas 75205

Engineering Department
4700 Drexel Dr.
Highland Park, Texas 75205

Address for giving notices:

10315 Alta Vista Rd
Fort Worth, Tx 76244

20

Town of Highland Park
Town Council
Tuesday, May 6, 2025

Item Coversheet

Take action on the minutes of the Special Town Council meeting held on April 9, 2025.

PRESENTED BY: Joanna Mekeal, Town Secretary

BACKGROUND:

Attached are the minutes of the Special Town Council meeting held on April 9, 2025.

RECOMMENDATION

Staff recommends approval.

FINANCIAL IMPACT

None.

ATTACHMENTS

2024-4-9 Special Meeting Minutes

MINUTES OF A SPECIAL MEETING OF THE TOWN COUNCIL OF THE TOWN OF HIGHLAND PARK, TEXAS, HELD AT 5950 SHERRY LANE, SUITE 700, DALLAS, TX 75225, AT 8:00 A.M. ON WEDNESDAY, APRIL 9, 2025.

Present at the meeting were Mayor Will C. Beecherl, Mayor Pro Tem Don Snell, and Town Council Members Marc Myers, Lydia Novakov, and Leland White. Council Member Alan Friedman was absent.

I. CALL TO ORDER

Mayor Beecherl called the meeting to order at 8:00 a.m.

II. MAIN AGENDA

Review, discuss, and hold interviews for strategic planning and facilitation firms. Mayor Beecherl, Town Council Members, and Town staff interviewed four firms. After the interviews, the Town Council and staff discussed the firm's proposals. Chelsey Gordon, Director of Policy Development and Strategic Initiatives, stated that this item would be brought to a future Town Council Meeting to authorize the Town Administrator to execute a contract with the selected firm.

III. ADJOURNMENT

Mayor Beecherl adjourned the Special meeting at 12:45 p.m.

Approved on the 6th day of May 2025.

APPROVED:

Will C. Beecherl
Mayor

ATTEST:

Joanna Mekeal
Town Secretary

Town of Highland Park
Town Council
Tuesday, May 6, 2025

Item Coversheet

Take action on the minutes of the Town Council meeting held on April 15, 2025.

PRESENTED BY: Joanna Mekeal, Town Secretary

BACKGROUND:

Attached are the minutes of the Town Council meeting held on April 15, 2025.

RECOMMENDATION

Staff recommends approval.

FINANCIAL IMPACT

None

ATTACHMENTS

2025-04-15 TC Minutes

MINUTES OF A MEETING OF THE TOWN COUNCIL OF THE TOWN OF HIGHLAND PARK, TEXAS, HELD AT THE TOWN HALL, 4700 DREXEL DRIVE, HIGHLAND PARK, TX, 75205, AT 8:00 A.M. ON TUESDAY, APRIL 15, 2025.

Mayor Will C. Beecherl, Mayor Pro Tem Don Snell, and Council Members Lydia Novakov, Alan Friedman, and Leland White attended the meeting. Town Council Member Marc Myers was absent.

I. Mayor Will C. Beecherl called the meeting to order at 8:00 a.m.

II. Council Member Leland White gave the Invocation.

III. PUBLIC COMMENT

Mayor Beecherl asked if anyone wished to address the Town Council about any item listed on the agenda and explained that the Town Council may not discuss or make decisions on items not listed on the agenda. Public comments are limited to three minutes per speaker unless otherwise required by law. Items suggested for action may be placed on a future agenda at the Town Council's discretion. There was no comment.

IV. PROCLAMATION

A. Proclamation recognizing April 13th - 19th, 2025, as National Public Safety Telecommunicator Week in the Town of Highland Park. Mayor Beecherl read the proclamation and thanked the staff for all their hard work.

V. CONSENT AGENDA

On a motion made by Mayor Pro Tem Don Snell, seconded by Council Member Lydia Novakov, the Town Council voted unanimously to approve Items A. through D. on the Consent Agenda. Prior to the vote, Mayor Beecherl explained that all items under the Consent Agenda are considered routine or discussed at a previous meeting. There will be no separate discussion of items unless a request by a Council Member is made prior to the Town Council voting on the motion.

A. *Take action on the service partnership between the Highland Park Department of Public Safety and Dynamark Monitoring.*
B. *Take action authorizing the Town Administrator to execute a contract for the FY 2025 Traffic Signal Upgrades.*
C. *Consider approval of the minutes of the Town Council meeting held on April 1, 2025.*
D. *Consider approval of the minutes of the Town Council study session held on April 1, 2025.*

VI. MAIN AGENDA

A. Review, discuss, and take action on proposed amendments to Code of Ordinance Section 3.01.002 to incorporate provisions related to the installation of artificial turf and Section 3.01.003 related to the installation of construction site perimeter fences. Jeff Armstrong, AICP,

Director of Community Development, stated that the Town's Code of Ordinances allows artificial turf on properties but prohibits it in front yards, easements, and where it can be seen from any street, sidewalk, parkway, or alley. Town staff recommends amending the ordinance to allow civic users to install artificial turf in front yards and where it might be seen from other public areas. The proposed ordinance defines "Civic use" as land or buildings used as public schools, universities, or government facilities. Staff proposes additional requirements for artificial turf, including allowed materials, drainage requirements, color that mimics natural turf, quality of the installation, and maintenance requirements. A further requirement applicable only in residential installations would limit the turf height to 1 1/2 to 2 1/2 inches. Additionally, Town staff proposes an amendment to the construction screening requiring the mesh material on the screening fence to be six to eight feet tall. In the current ordinance, the definition states the mesh material to be six to eight feet in height. Still, another paragraph states that the mesh shall be limited to four feet in height to allow visibility onto the site for security. The Department of Public Safety has been involved in discussions about this proposed change and is in support. Council Member Novakov suggested adding language to the ordinance that clarifies that the artificial turf for "Civic use" is used for playgrounds and athletic fields. The Town Council Members agreed with Council Member Novakov, and the Mayor requested that the language be added to the ordinance. On a motion made by Council Member Lydia Novakov, seconded by Council Member Leland White, the Town Council voted unanimously to approve amendments to Code of Ordinance Section 3.01.002 to incorporate provisions related to the installation of artificial turf with clarifying language specifying that it is permitted for playgrounds and athletic fields intended for "Civic use", and Section 3.01.003, regarding the installation of construction site perimeter fences.

Mayor Beecherl adjourned the Town Council meeting at 8:16 a.m.

Approved on the 6th day of May 2025.

APPROVED:

ATTEST:

Will C. Beecherl
Mayor

Joanna Mekeal
Town Secretary

Town of Highland Park
Town Council
Tuesday, May 6, 2025

Item Coversheet

Take action on the minutes of the Town Council study session held on April 15, 2025.

PRESENTED BY: Joanna Mekeal, Town Secretary

BACKGROUND:

Attached are the minutes of the Town Council Study Session held on April 15, 2025.

RECOMMENDATION

Staff recommends approval.

FINANCIAL IMPACT

None.

ATTACHMENTS

2025-4-15 TCSS Minutes

MINUTES OF A STUDY SESSION OF THE TOWN COUNCIL OF THE TOWN OF HIGHLAND PARK, TEXAS, HELD AT TOWN HALL, 4700 DREXEL DRIVE, HIGHLAND PARK, TX, 75205, AT 8:20 A.M. ON TUESDAY, APRIL 15, 2025.

Mayor Will C. Beecherl, Mayor Pro Tem Don Snell, and Council Members Lydia Novakov, Alan Friedman, and Leland White attended the meeting. Town Council Member Marc Myers was absent.

PUBLIC COMMENT

Mayor Beecherl asked if anyone wished to address the Town Council about any item listed on the agenda and explained that the Town Council may not discuss or make decisions on items not listed on the agenda. Public comments are limited to three minutes per speaker unless otherwise required by law. Items suggested for action may be placed on a future agenda at the Town Council's discretion. There was no comment.

FUTURE AGENDA DISCUSSION

Review, discuss, and consider the opportunity for a Town Council Member to request an item to be placed on a future Town Council meeting agenda. Mayor Beecherl asked if any Town Council Member would like to request an item be placed on a future Town Council study session agenda for discussion or consideration. There was no comment.

EXECUTIVE SESSION

1. *In accordance with Texas Government Code, Section 551.001, et seq., the Town Council will recess into Executive Session (closed meeting) to discuss §551.071: Consultation with Attorney regarding (1) pending or contemplated litigation or settlement offer re: USAI, LP v. Town of Highland Park - Cause No. DC-20-80213 and (2) a matter in which the duty of the attorney to the governmental body under the Texas Disciplinary Rules of Professional Conduct of the State Bar of Texas clearly conflicts with this chapter re: §§ 211.001, 211.013, and 212.010-212.016 of the Texas Local Government Code and Chapters 18 and 22 of Town of Highland Park Zoning Ordinance.*
2. §551.072: to deliberate the purchase, exchange, lease, or value of real property.

   Mayor Beecherl recessed the study session at 8:21 a.m. and convened in a closed session at 8:22 a.m. Mayor Beecherl ended the closed session at 9:38 a.m. and reconvened the study session in open session at 9:38 a.m. No final action, decision, or vote was taken during the closed session.

RECONVENE INTO OPEN SESSION

1. *Pursuant to Section 551.102 of the Texas Government Code, the final action, decision, or vote regarding Closed Session Item 1. and Item 2. above, shall be made, if any.* No motion was made.

Mayor Beecherl adjourned the meeting at 9:39 a.m.

APPROVED on the 6th day of May 2025.

APPROVED:

Will C. Beecherl
Mayor

ATTEST:

Joanna Mekeal
Town Secretary

Town of Highland Park
Town Council
Tuesday, May 6, 2025

Item Coversheet

Review, discuss, and take action to extend the construction time period for a new single-family residence at 3821 Gillon Avenue from May 16, 2025, to November 30, 2025. An extension of six and one-half months.

PRESENTED BY: Jeff Armstrong, Director of Community Development

BACKGROUND:

The applicant, James Cox of Hawkins-Welwood Homes, is requesting a permit extension of 6 1/2 months to complete construction of a new house at 3821 Gillon Avenue. The building permit was issued on May 17, 2023. The request would extend the permit to November 30, 2025.

The applicant's explanation for the need for additional time includes the construction of a basement and a change in scope from a traditional HVAC system to a geothermal system. Other delays were a result of changes to the electrical system and the fireplace, as well as supply chain delays.

There is no record of citizen complaints related to this project. One email supporting the extension was received from a nearby property owner.

RECOMMENDATION

Staff recommends approval of an extension to allow an additional 6 1/2 months to complete the project, extending the permit to November 30, 2025.

FINANCIAL IMPACT

The fee for extending the construction timeframe in place at the time this permit was issued was 50% of the original permit fee. Based on that methodology, the extension fee would be $10,968.10.

ATTACHMENTS

Extension of Permit Letter and Schedule

Hawkins-Welwood
HOMES

March 31, 2025

Jeff Armstrong
Director of Community Development
Town of Highland Park
4700 Drexel Drive
Highland Park, TX 75205

Re: 3821 Gillon Avenue – Permit No. 23-0523

Dear Jeff,

I hope this letter finds you well, I am writing to formally request an extension for building permit No. 23-0523 for the project located at 3821 Gillon Drive.

We have encountered multiple delays including:

- Extensive weather delays during excavation of the basement and obtaining inspections from both engineers and the city.
- Change in scope from traditional HVAC to geothermal, metal to masonry fireplace, electrical changes, supply chain delays and other areas.
- Several re-inspections and delays which were due to lack of communication with current software.

We are committed to ensuring the project is completed in accordance with all applicable codes and regulations and we anticipate completion of the project by November 2025. We kindly ask for your consideration in granting this extension to allow us to complete the project without interruption.

I am available to discuss any of these items with you. Please let me know if you have any questions.

Sincerely,

James Cox
Director of Production
817-691-8036

3821 Gillon Avenue

Construction Schedule

As of 11/21/2024

Updated 3/31/2025

Currently:

~~September 2024~~	~~Frame complete~~
	~~Windows installed (90%)~~
	~~Electrical rough~~
	~~Plumbing top out~~
	~~HVAC rough~~
~~October 2024~~	~~Continue Seconds~~
	~~Start Masonry~~
	~~Install Fireplaces~~
~~November 2024~~	~~Masonry~~
	~~Finish Electric Rough~~
	~~Finish HVAC Rough~~
	~~Finish AV/security Prewire~~
	~~Finish fire sprinkler Rough~~
~~December 2024~~	~~Masonry~~
	~~Pass Frame Inspection~~
	~~Drywall, TBT~~
	~~Insulate~~
	~~Trim~~
	~~Install Fireplaces~~
~~January 2025~~	~~Masonry~~
	~~Trim (Base for flush base)~~
~~February 2025~~	~~Trim (Base for flush base)~~
	~~Wood Floors~~
	~~Complete Wood Floors~~
	~~*Masonry*~~

March 2025	~~Complete Sheetrock~~ ~~Tape, bed and Texture~~ ~~Trim (Finish Base and Interior Doors)~~ ~~*Masonry*~~
April 2025	Stairs Install Mantles Start Tile Install Garage Door *Finish Masonry* *Finish Roof*
May 2025	Install Cabinets Finish Trim Details Finish Tile *Exterior Flatwork* *Start Exterior Walls* *Start Pool*
June 2025	Start Paint Landscape Paint Install Elevator Finish Paint *Finish Pool* *Start Exterior Pavers* *Irrigation/Drainage*
July 2025	Install Elevator Install Countertops Install Slab Material at Showers Hardware Plumbing, AV, Electrical Trim, HVAC Trim *Irrigation/Drainage* *Finish Exterior Pavers* *Continue Exterior Walls*

August 2025	Plumbing, AV, Electrical Trim, HVAC Trim Fire Sprinkler Trim Mirrors/Shower Doors Appliances Carpet Inspections *Landscape* *Install Gas Lights* *Complete Exterior Walls*
September 2025	Paint Touchup Wallpaper Sand and Seal Floors Install Dining Room Decorative Screen Install interior shades Install Water Filter Paint Garage Floor Inspections *Install Balcony Tile* *Install Exterior Shades* *Landscape* *Install Drive Gate* *Install walk Gates* *Install built-in benches at courtyard*
October 2025	*Complete Landscape* *Complete Landscape Lighting* Install Gas Logs Final walk through Inspections
November 2025	Project Complete/Move-In

Town of Highland Park
Town Council
Tuesday, May 6, 2025

Item Coversheet

Review, discuss, and take action on a referral to the Zoning Commission, a request to amend Planned Development Ordinance No. 1257 regarding new athletic fields and related facilities for McCullogh Intermediate School/Highland Park Middle School, located at 3520 Normandy Avenue.

PRESENTED BY:

BACKGROUND:

Highland Park Independent School District plans to develop athletic fields at the Intermediate School/Middle School campus. The campus is located in both Highland Park and University Park. The portion in Highland Park is located in a planned development district ("PD"). The proposed improvements would be located entirely within the Town of Highland Park and require an amendment to the PD ordinance.

The proposed improvements include a football/soccer field, practice fields, a scoreboard, and track and field facilities. All new turf areas would be comprised of artificial turf.

RECOMMENDATION

Staff recommends the Town Council refer the requested PD amendment to the Zoning Commission.

FINANCIAL IMPACT

None

ATTACHMENTS

Highland Park Middle School Layout 3.4.25

HIGHLAND PARK MIDDLE SCHOOL
HIGHLAND PARK INDEPENDENT SCHOOL DISTRICT
SYNTHETIC TURF AND TRACK COLOR LAYOUT PLAN

Job No: HIGHLAND PARK MS
Date: 2/5/25
Prepared By: C. BULLIS

SHEET 1

Town of Highland Park
Town Council
Tuesday, May 6, 2025

Item Coversheet

Review, discuss, and take action on a proposed replat creating Lot 1R1, Block 170/2 of the Highland Park Shops Addition, a replat of Lots 1 through 6, Block 2, Highland Park Acreage Addition, Lot 1R, Block 170/2, Corrigan Oak Lawn Addition, a part of Prescott Avenue, and a part of Wycliffe Avenue, located at 4200 Oak Lawn Avenue.

PRESENTED BY: Jeff Armstrong, Director of Community Development

BACKGROUND:

On April 21, 2020, the Town Council approved Ordinance No. 2062, which abandoned the alley behind the Shops at Highland Park shopping center and small portions of Wycliffe and Prescott Avenues. In May 2020, the abandoned rights-of-way were conveyed to the owner of the shopping center. The Contract for Sale of the abandoned rights-of-way included a provision that the property should be replatted to include all the owner's property, including the portions of right-of-way purchased from the Town. The property owner is now in the process of doing the replat.

The timing of the replat is due to the owner's desire to provide outdoor seating areas for restaurant patrons. The outdoor seating cannot meet Town ordinances without a replat of the property, primarily due to lot coverage limitations. This replat will not allow construction on the easement where the alley previously existed, nor can any buildings be placed on the portion of the property that includes the parking lot located behind the building, east of the easement.

RECOMMENDATION

The proposed replat meets all the requirements of the Highland Park Subdivision Ordinance. Therefore, staff recommends approval.

FINANCIAL IMPACT

None

ATTACHMENTS

RELAT_Highland_Park_Shops_pg 1, RELAT_Highland_Park_Shops_pg 2

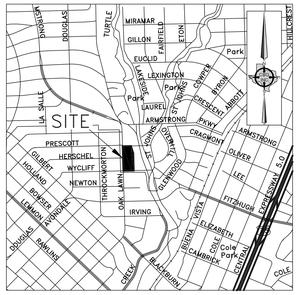

VICINITY MAP
NOT TO SCALE

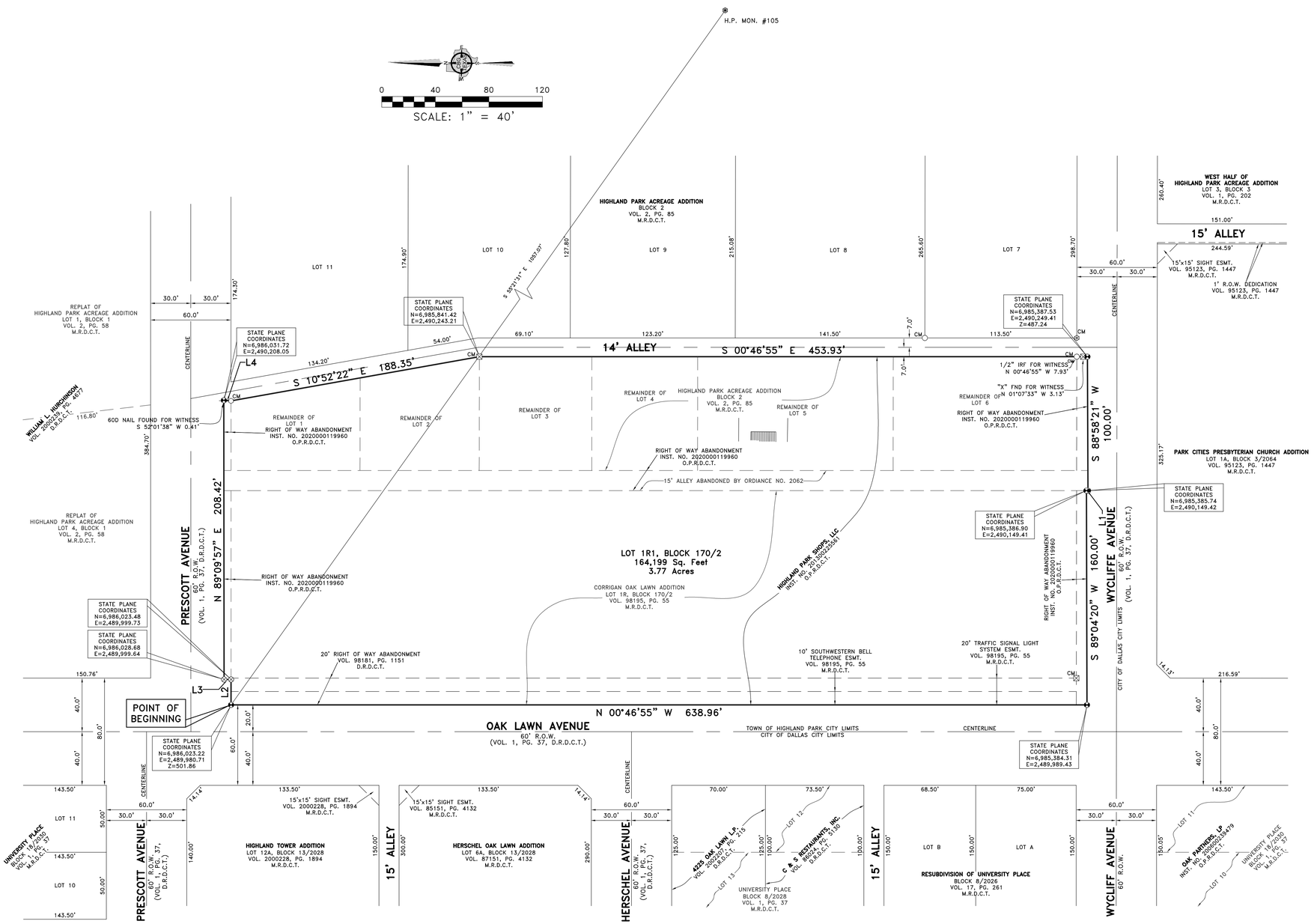

LINE	BEARING	DISTANCE
L1	N 00°46'55" W	1.17'
L2	N 89°12'03" E	19.02'
L3	N 00°56'29" W	5.20'
L4	S 03°51'54" W	5.35'

SHEET 1 OF 2

GENERAL NOTES

1) BEARINGS SHOWN ARE BASED ON THE STATE PLANE COORDINATE SYSTEM, NORTH TEXAS CENTRAL ZONE (4202), NORTH AMERICAN DATUM OF 1983 (2011).
2) THE PURPOSE OF THIS PLAT IS TO CREATE 1 LOT.
3) SELLING A PORTION OF THIS ADDITION BY METES AND BOUNDS IS A VIOLATION OF TOWN ORDINANCE AND STATE LAW AND IS SUBJECT TO FINES AND WITHHOLDING OF UTILITIES AND BUILDING PERMITS.
4) NO FLOODPLAIN EXISTS ON SITE.
5) COORDINATES SHOWN HEREON ARE TEXAS STATE PLANE COORDINATE SYSTEM, NORTH CENTRAL ZONE (4202), NORTH AMERICAN DATUM OF 1983 ON GRID COORDINATE VALUES, NO SCALE AND NO PROJECTION.
6) BENCHMARK IS GEODETIC CONTROL MONUENT H.P.#105. ELEVATION = 470.41.

LEGEND

D.R.D.C.T. = DEED RECORDS, DALLAS COUNTY, TEXAS
M.R.D.C.T. = MAP RECORDS, DALLAS COUNTY, TEXAS
O.P.R.D.C.T. = OFFICIAL PUBLIC RECORDS, DALLAS COUNTY, TEXAS
INST. NO. = INSTRUMENT NUMBER
VOL. = VOLUME
PG. = PAGE
CM = CONTROLLING MONUMENT
R.O.W. = RIGHT-OF-WAY
⊠ = "X" FOUND IN CONCRETE
○ = 1/2 INCH IRON ROD FOUND
⊕ = 3/8 INCH IRON ROD FOUND
⊕ = 60D NAIL FOUND
⊕ = MAG NAIL SET
○ = RAILROAD SPIKE FOUND
⊗ = 1/2 INCH IRON ROD SET WITH YELLOW PLASTIC CAP STAMPED "CBG SURVEYING"
⊛ = HIGHLAND PARK MONUMENT

OWNER: HIGHLAND PARK SHOPS, LLC
5950 BERKSHIRE LANE, SUITE 800
DALLAS, TEXAS 75225
PHONE: 214-220-3411

REPLAT OF
HIGHLAND PARK SHOPS ADDITION
LOT 1R1, BLOCK 170/2
164,199 SQ.FT. / 3.77 ACRES
BEING A REPLAT OF
A PART OF PRESCOTT AVENUE
A PART OF WYCLIFF AVENUE
A PART OF LOTS 1-6, BLOCK 2
HIGHLAND PARK ACREAGE ADDITION
LOT 1R, BLOCK 170/2
CORRIGAN OAK LAWN ADDITION
WILLIAM GRIGSBY SURVEY, ABSTRACT NO. 501
TOWN OF HIGHLAND PARK, DALLAS COUNTY, TEXAS
ADDRESS: 4200 OAK LAWN AVENUE

CBG SURVEYING TEXAS LLC
PROFESSIONAL LAND SURVEYORS
PLANNING & SURVEYING
Main Office
12025 Shiloh Road, Ste. 230
Dallas, TX 75228
P 214.349.9485
F 214.349.2216
Firm No. 10168800
www.cbgintctx.com

SCALE: 1"=30' / DATE: 5/05/2020 / JOB NO. 2003946-PLAT / DRAWN BY: TO

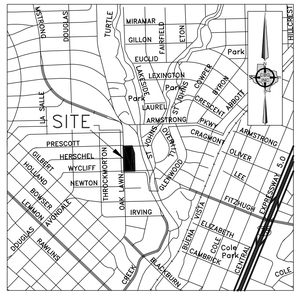

VICINITY MAP
NOT TO SCALE

GENERAL NOTES

1) BEARINGS SHOWN ARE BASED ON THE STATE PLANE COORDINATE SYSTEM, NORTH TEXAS CENTRAL ZONE (4202), NORTH AMERICAN DATUM OF 1983 (2011).
2) THE PURPOSE OF THIS PLAT IS TO CREATE 1 LOT.
3) SELLING A PORTION OF THIS ADDITION BY METES AND BOUNDS IS A VIOLATION OF TOWN ORDINANCE AND STATE LAW AND IS SUBJECT TO FINES AND WITHHOLDING OF UTILITIES AND BUILDING PERMITS.
4) NO FLOODPLAIN EXISTS ON SITE.
5) COORDINATES SHOWN HEREON ARE TEXAS STATE PLANE COORDINATE SYSTEM, NORTH CENTRAL ZONE (4202), NORTH AMERICAN DATUM OF 1983 ON GRID COORDINATE VALUES, NO SCALE AND NO PROJECTION.
6) BENCHMARK IS GEODETIC CONTROL MONUENT H.P.#105. ELEVATION = 470.41.

OWNER'S CERTIFICATE

STATE OF TEXAS
COUNTY OF DALLAS

Whereas Highland Park Shops, LLC is the owner of a tract of land situated in the William Grigsby Survey, Abstract No. 501, Town of Highland Park, Dallas County, Texas, and being a portion of Prescott Avenue (60 foot right of way), a portion of Wycliff Avenue (60 foot right of way), and being all of a 15 foot alley by deed recorded in Volume 2264, Page 581, Deed Records, Dallas County, Texas, and being a portion of Lots 1, 2, 3, 4, 5 and 6, Block 2, Highland Park Acreage Addition, an addition to the Town of Highland Park, Dallas County, Texas, according to the Map thereof recorded in Volume 2, Page 85, Map Records, Dallas County, Texas, and being all of Lot 1R, Block 170/2, Corrigan Oak Lawn Addition, an addition to the Town of Highland Park, Dallas County, Texas, according to the Map thereof recorded in Volume 98195, Page 55, Map Records, Dallas County, Texas, same being a tract of land conveyed to Highland Park Shops, LLC by deed recorded in Instrument No. 201300225561, Official Public Records, Dallas County, Texas, and being more particularly described by metes and bounds as follows:

BEGINNING at a Mag nail set for corner, said corner being the Northwest corner of said Corrigan Oak Lawn Addition, said corner being the East right of way line of Oak Lawn Avenue (60 foot right of way) and the South right of way line of Prescott Avenue (60 foot right of way);

THENCE North 89 degrees 12 minutes 03 seconds East along the South right of way line of said Prescott Avenue, a distance of 19.02 feet to a 1/2 inch iron rod set with yellow plastic cap stamped "CBG SURVEYING" for corner;

THENCE North 00 degrees 56 minutes 29 seconds West, a distance of 5.20 feet to a 1/2 inch iron rod set with yellow plastic cap stamped "CBG SURVEYING" for corner;

THENCE North 89 degrees 09 minutes 57 seconds East, a distance of 208.42 feet to a Mag nail set for corner, from which a 60D nail found bears South 52 degrees 01 minutes 38 seconds West, a distance of 0.41 feet for witness;

THENCE South 03 degrees 51 minutes 54 seconds West, a distance of 5.35 feet to a Railroad spike found for corner, said corner being along the West right of way line of a 14 foot alley;

THENCE South 10 degrees 52 minutes 22 seconds East along the West right of way line of said 14 foot alley, a distance of 188.35 feet to an "X" found in concrete for corner;

THENCE South 00 degrees 46 minutes 55 seconds East continuing along the West right of way line of said 14 foot alley, a distance of 453.93 feet to a Mag nail set for corner, from which a 1/2 inch iron rod found bears North 00 degrees 46 minutes 55 seconds West, a distance of 7.93 feet for witness, and from which an "X" found bears North 01 degrees 07 minutes 33 seconds West, a distance of 3.13 feet for witness;

THENCE South 88 degrees 58 minutes 21 seconds West, a distance of 100.00 feet to a Mag nail set for corner;

THENCE North 00 degrees 46 minutes 55 seconds West, a distance of 1.17 feet to a Mag nail set for corner;

THENCE South 89 degrees 04 minutes 20 seconds West, a distance of 160.00 feet to a Mag nail set for corner, said corner being along the East right of way line of said Oak Lawn Avenue;

THENCE North 00 degrees 46 minutes 55 seconds West along the East right of way line of said Oak Lawn Avenue, a distance of 638.96 feet to the POINT OF BEGINNING and containing 164,199 square feet or 3.77 acres of land.

OWNER'S DEDICATION

NOW THEREFORE, KNOW ALL MEN BY THESE PRESENTS:

WHEREAS, Highland Park Shops, LLC, acting by and through its duly authorized officer, does hereby adopt this plat, designating the herein described property as **HIGHLAND PARK SHOPS ADDITION**, an addition to the Town of Highland Park, Dallas County, Texas, and do hereby dedicate, in fee simple, to the public use forever any streets, alleys, and floodway management areas shown thereon. The easements shown thereon are hereby reserved for the purposes indicated. The utility and fire lane easements shall be open to the public, fire and police units, garbage and rubbish collection agencies, and all public and private utilities for each particular use. The maintenance of paving on the utility and fire lane easements is the responsibility of the property owner. No buildings, fences, trees, shrubs, or other improvements or growths shall be constructed, reconstructed or placed upon, over or across the easements as shown. Said easements being hereby reserved for the mutual use and accommodation of all public utilities using or desiring to use same. All, and any public utility shall have the right to remove and keep removed all or parts of any building, fences, trees, shrubs, or other improvements or growths which in any way may endanger or interfere with the construction, maintenance or efficiency of its respective system on the easements, and all public utilities shall at all times have the full right of ingress and egress to or from the said easements for the purpose of constructing, reconstructing, inspecting, patrolling, maintaining and adding to or removing all or parts of its respective systems without the necessity at any time of procuring the permission of anyone. (Any public utility shall have the right of ingress and egress to private property for the purpose of reading meters and any maintenance or service required or ordinarily performed by that utility).

Water main and wastewater easements shall also include additional area of working space for construction and maintenance of the systems. Additional easement area is also conveyed for installation and maintenance of manholes, cleanouts, fire hydrants, water services and wastewater services from the main to the curb or pavement line, and description of such additional easements herein granted shall be determined by their location as installed.

This plat approved subject to all platting ordinances, rules, regulations, and resolutions of the Town of Highland Park.

WITNESS, my hand at Dallas, Texas, this the _____ day of _____, 2025.

BY: _____
Highland Park Shops, LLC, Owner
Kenneth Pratt, Manager

STATE OF TEXAS
COUNTY OF DALLAS

BEFORE ME, the undersigned, a Notary Public in and for said County and State on this day appears Kenneth Pratt known to me to be the person whose name is subscribed to the foregoing instrument and acknowledged to me that he/she executed the same for the purposes and considerations therein expressed.

GIVEN UNDER MY HAND AND SEAL OF OFFICE, this the _____ day of _____, 2025.

_____
Notary Public in and for Dallas County, Texas.

SURVEYOR'S STATEMENT:

Know All Men By These Presents:

That I, Bryan Connally, a Registered Professional Land Surveyor, licensed by the State of Texas, do hereby certify that I prepared this plat from an actual and accurate survey of the land and that the corner monuments shown thereon were properly placed under my supervision.

RELEASED FOR REVIEW 4/25/2025 PRELIMINARY, THIS DOCUMENT SHALL NOT BE RECORDED FOR ANY PURPOSES AND SHALL NOT BE USED OR VIEWED OR RELIED UPON AS A FINAL SURVEY DOCUMENT.

_____
Signature

_____
Date

STATE OF TEXAS
COUNTY OF DALLAS

BEFORE ME, the undersigned, a Notary Public in and for the said County and State, on this day personally appeared Bryan Connally known to me to be the person whose name is subscribed to the foregoing instrument and acknowledged to me that he executed the same for the purpose therein expressed and under oath stated that the statements in the foregoing certificate are true.

GIVEN UNDER MY HAND AND SEAL OF OFFICE this _____ day of _____, 2025.

_____
Notary Public in and for the State of Texas

Approved this _____ day of _____, 20_____, by the Town Council of the Town of Highland Park, Texas.

Attest:

_____
Will C. Beecherl, Mayor, Town of Highland Park, Texas

_____
Town Secretary, Town of Highland Park, Texas

SHEET 2 OF 2

REPLAT OF
HIGHLAND PARK SHOPS ADDITION
LOT 1R1, BLOCK 170/2
164,199 SQ.FT. / 3.77 ACRES
BEING A REPLAT OF
A PART OF PRESCOTT AVENUE
A PART OF WYCLIFF AVENUE
A PART OF LOTS 1-6, BLOCK 2
HIGHLAND PARK ACREAGE ADDITION
LOT 1R, BLOCK 170/2
CORRIGAN OAK LAWN ADDITION
WILLIAM GRIGSBY SURVEY, ABSTRACT NO. 501
TOWN OF HIGHLAND PARK, DALLAS COUNTY, TEXAS
ADDRESS: 4200 OAK LAWN AVENUE

OWNER: HIGHLAND PARK SHOPS, LLC
5950 BERKSHIRE LANE, SUITE 800
DALLAS, TEXAS 75225
PHONE: 214-220-3411

CBG
SURVEYING TEXAS LLC
PROFESSIONAL LAND SURVEYORS
PLANNING & SURVEYING
Main Office
12025 Shiloh Road, Ste. 230
Dallas, TX 75228
P 214.349.9485
F 214.349.2216
Firm No. 10168800
www.cbginctx.com

SCALE: 1"=30' / DATE: 5/05/2020 / JOB NO. 2003946-PLAT / DRAWN BY: TO

Town of Highland Park
Town Council
Tuesday, May 6, 2025

Item Coversheet

Review, discuss and consider authorizing the Town Administrator to execute a contract with the Mejorando Group for Strategic Planning and Facilitation Services.

PRESENTED BY: Chelsey Gordon, Director of Policy Development and Strategic Initiatives

BACKGROUND:

At a Town Council Study Session held in January, the Town Council was presented with the strategy and timeline for a strategic planning process to help identify goals and priorities that will continue to make Highland Park a premier community throughout the years to come.

Town staff conducted a Request for Proposals ("RFP") for strategic planning and facilitation services. The RFP process started on February 7th and concluded on March 3rd. The RFP process resulted in the Town receiving eleven proposals. Each proposal was ranked by the Town Administrator, Assistant Town Administrator, and Director of Policy Development and Strategic Initiatives.

Interviews were conducted by the Town Council on April 9, 2025, with the top four firms. Interviews allowed the Town Council the opportunity to meet the project team, listen to their proposed strategy, and ask any follow-up questions. Based on the proposals received and interviews, the Mejorando Group was selected to conduct the Town's strategic planning process. As part of contract negotiation, references were checked and staff conducted follow-up conversations with the firm to ensure there would be no issues beginning the process over the summer and to confirm the firm's ability to provide in-depth assistance with operational objectives and performance measures.

It is anticipated that the strategic planning process with the Mejorando Group will follow the schedule below. A resident survey is anticipated to be conducted by a separate firm during the months of June and July. The Mejorando Group will be assisting on question development during the month of May.

Date	Activity
May	**1. Engage** – Initiate the Process
August	**2. Enlist** – Conduct interviews with elected officials, Town executives and a range of Town employees along with targeted community outreach (via online and three community conversations). A summary of input gathered will be prepared and shared.
September	**3. Examine and Explore** – Design and facilitate full-day retreat with Mayor and Council
October/November	**4. Explore** – Provide advisory consulting services to Town executives in crafting Goals, Objectives, Tactics and Performance Metrics. Prepare a draft of the Strategic Plan and present it to the Mayor and Council at a work session for their review and discussion. Incorporate edits into the Strategic Plan.
December	**5. Action:** Strategic Plan adopted by Mayor and City Council
October - January	**6. Execute**: Implement the Strategic Plan

RECOMMENDATION

Staff recommends authorizing the Town Administrator to execute a contract with the Mejorando Group for an amount not to exceed $33,600.00

FINANCIAL IMPACT

As this is a new initiative, these costs will be funded through reprioritizing existing budgeted resources within the general fund or through a future budget amendment.

ATTACHMENTS

Mejorando Group HP Contract - Final for execution

TOWN OF HIGHLAND PARK

CONTRACT SERVICES AGREEMENT FOR

STRATEGIC PLANNING SERVICES

This Contract Services Agreement ("Agreement") is made and entered into this ____ day of _____ 2025, by and between the Town of Highland Park, a municipal corporation ("Town"), and Patrick Ibarra, dba The Mejorando Group, a sole proprietorship ("Consultant"). The term Consultant includes professionals performing in a consulting capacity. The parties hereto agree as follows:

1.0 SERVICES OF CONSULTANT

1.1 Scope of Services. In compliance with all terms and conditions of this Agreement, Consultant shall provide the work and services specified in the "Scope of Services" attached hereto as *Exhibit "A"* and incorporated herein by this reference. Consultant warrants that all work or services set forth in the Scope of Services will be performed in a competent, professional and satisfactory manner.

1.2 Consultant's Proposal. The Scope of Services shall include the Consultant's proposal which shall be incorporated herein by this reference as though fully set forth herein. In the event of any inconsistency between the terms of such proposal and this Agreement, the terms of this Agreement shall govern.

1.3 Compliance with Law. All work and services rendered hereunder shall be provided in accordance with all ordinances, resolutions, statutes, rules, and regulations of the Town and any Federal, State or local governmental agency having jurisdiction.

1.4 Licenses, Permits, Fees and Assessments. Consultant shall obtain at its sole cost and expense, such licenses, permits and approvals as may be required by law for the performance of the services required by this Agreement. Consultant shall have the sole obligation to pay for any fees, assessments, taxes, including applicable penalties and interest, which may be imposed by law and arise from or are necessary for the Consultant's performance of the services required by this Agreement; and shall indemnify, defend and hold harmless Town against any claim for such fees, assessments, taxes, penalties or interest levied, assessed or imposed against Town hereunder.

1.5 Familiarity with Work. By executing this Agreement, Consultant warrants that Consultant (a) has thoroughly investigated and considered the scope of services to be performed, (b) has carefully considered how the work and services should be performed, and (c) fully understands the facilities, difficulties and restrictions attending performance of the services under this Agreement.

1.6 Additional Services. Town shall have the right at any time during the performance of the services, without invalidating this Agreement, to order extra work beyond that specified in the Scope of Services or make changes by altering, adding to or deducting from said work. No such extra work may be undertaken unless a written order is first given by the Contract Officer (hereinafter defined) to the Consultant, incorporating therein any adjustment in (i) the Contract Sum (hereinafter defined), and/or (ii) the time to perform this Agreement, which said adjustments are subject to the written approval of the Consultant. Any increase in compensation must be approved by the Town

Council. It is expressly understood by Consultant that the provisions of this Section shall not apply to services specifically set forth in the Scope of Services or reasonably contemplated therein. Consultant hereby acknowledges that it accepts the risk that the services provided pursuant to the Scope of Services may be more costly or time-consuming than Consultant anticipates and that Consultant shall not be entitled to additional compensation therefor.

1.7 Environmental Laws. Consultant shall comply with all applicable environmental laws, ordinances, codes and regulations of Federal, State, and local governments. Consultant shall also comply with all applicable mandatory standards and policies relating to energy efficiency.

2.0 COMPENSATION

2.1 Contract Sum. For the services rendered pursuant to this Agreement, Consultant shall be compensated in accordance with the "Schedule of Compensation" attached hereto as *Exhibit "B"* and incorporated herein by this reference, but not exceeding the maximum contract amount of Thirty Three Thousand and Six Hundred dollars ($33,600.00) ("Contract Sum"), except as provided in Section 1.6. The method of compensation may include: (i) a lump sum payment upon completion, (ii) payment in accordance with the percentage of completion of the services, (iii) payment for time and materials based upon the Consultant's rates as specified in the Schedule of Compensation, but not exceeding the Contract Sum or (iv) such other methods as may be specified in the Schedule of Compensation. Compensation may include reimbursement for actual and necessary expenditures approved by the Contract Officer in advance if specified in the Schedule of Compensation. The Contract Sum shall include the attendance of Consultant at all project meetings reasonably deemed necessary by the Town.

Consultant agrees that if Consultant becomes aware of any facts, circumstances, techniques, or events that may or will materially increase or decrease the cost of the work or services or, if Consultant is providing design services, the cost of the project being designed, Consultant shall promptly notify the Contract Officer of said fact, circumstance, technique or event and the estimated increased or decreased cost related thereto and, if Consultant is providing design services, the estimated increased or decreased cost estimate for the project being designed.

2.2 Method of Payment. Unless some other method of payment is specified in the Schedule of Compensation, in any month in which Consultant wishes to receive payment, no later than the first (1st) working day of such month, Consultant shall submit to the Town, in a form approved by the Town's Director of Finance, an invoice for services rendered prior to the date of the invoice. Except as provided in Section 7.2, Town shall pay Consultant for all expenses stated thereon which are approved by Town pursuant to this Agreement generally within thirty (30) days, and no later than forty-five (45) days, from the submission of an invoice in an approved form.

2.3 Availability of Funds. It is mutually understood between the parties that this Agreement is valid and enforceable only if sufficient funds are made available by the Town Council of the Town for the purposes of this Agreement. The availability of funding is affected by matters outside the Town's control, including other governmental entities. Accordingly, the Town has the option to void the whole Agreement or to amend the Agreement to reflect unanticipated reduction in funding for any reason.

3.0 PERFORMANCE SCHEDULE

3.1 Schedule of Performance. Consultant shall commence the services pursuant to this Agreement upon receipt of a written notice to proceed and shall perform all services within the time period(s) established in the "Schedule of Performance" attached hereto as *Exhibit "C"*, if any, and incorporated herein by this reference. When requested by the Consultant, extensions to the time period(s) specified in the Schedule of Performance may be approved in writing by the Contract Officer but not exceeding one hundred eighty (180) days cumulatively.

3.2 Force Majeure. The time period(s) specified in the Schedule of Performance for performance of the services rendered pursuant to this Agreement shall be extended because of any delays due to unforeseeable causes beyond the control and without the fault or negligence of the Consultant, including, but not restricted to, acts of God or of the public enemy, unusually severe weather, fires, earthquakes, floods, epidemics, quarantine restrictions, riots, strikes, freight embargoes, wars, litigation, and/or acts of any governmental agency, including the Town, if the Consultant shall, within ten (10) days of the commencement of such delay, notify the Contract Officer in writing of the causes of the delay. The Contract Officer shall ascertain the facts and the extent of delay and extend the time for performing the services for the period of the enforced delay when and if, in the judgment of the Contract Officer, such delay is justified. The Contract Officer's determination shall be final and conclusive upon the parties to this Agreement. In no event shall Consultant be entitled to recover damages against the Town for any delay in the performance of this Agreement, however caused; Consultant's sole remedy being extension of the Agreement pursuant to this Section.

3.3 Term. Unless earlier terminated in accordance with Section 7.4 below, this Agreement shall continue in full force and effect until completion of the services no later than December 31, 2025.

4.0 COORDINATION OF WORK

4.1 Representative of Consultant. Patrick Ibarra is hereby designated as being the representative of Consultant authorized to act on its behalf with respect to the work or services specified herein and to make all decisions in connection therewith.

It is expressly understood that the experience, knowledge, capability and reputation of the representative was a substantial inducement for Town to enter into this Agreement. Therefore, the representative shall be responsible during the term of this Agreement for directing all activities of Consultant and devoting sufficient time to personally supervise the services hereunder. For purposes of this Agreement, the representative may not be replaced, nor may his responsibilities be substantially reduced by Consultant without the express written approval of Town.

4.2 Contract Officer. The Town's Director of Public Policy and Strategic Initiatives is hereby designated as the representative of the Town authorized to act in its behalf with respect to the work and services and to make all decisions in connection therewith ("Contract Officer"). It shall be the Consultant's responsibility to assure that the Contract Officer is kept informed of the progress of the performance of the services and the Consultant shall refer any decisions which must be made by Town to the Contract Officer. The Town may designate another Contract Officer by providing written notice to Consultant.

4.3 Independent Contractor. Neither the Town nor any of its employees shall have any control over the manner or means by which Consultant or employees, perform the services required

herein, except as otherwise set forth herein. Consultant shall perform all services required herein as an independent contractor of Town and shall remain under only such obligations as are consistent with that role. Consultant represents and warrants that the personnel used to provide services to the Town pursuant to this Agreement are classified by Consultant as employees. Consultant shall not at any time or in any manner represent that it or any of its employees are employees of Town. Town shall not in any way or for any purpose become or be deemed to be a partner of Consultant in its business or otherwise or a joint venturer or a member of any joint enterprise with Consultant. In the event that Consultant or any employee of Consultant providing services under this Agreement claims or is determined by a federal or state agency, a court of competent jurisdiction, to be classified as other than an independent contractor for the Town, then Consultant shall indemnify, defend, and hold harmless the Town for the payment of any and all assessed fines, penalties, judgments, employee and/or employer contributions, and any other damages and costs assessed to the Town as a consequence of, or in any way attributable to, the assertion that Consultant or any staff Consultant used to provide services under this Agreement are employees of the Town.

5.0 INSURANCE AND INDEMNIFICATION

5.1 Insurance. Consultant shall procure and maintain, at its sole cost and expense, in a form and content satisfactory to Town, during the entire term of this Agreement including any extension thereof, the following policies of insurance:

(a) Commercial General Liability Insurance. A policy of commercial general liability insurance using Insurance Services Office "Commercial General Liability" policy. Coverage for an additional insured shall not be limited to its vicarious liability. Defense costs must be paid in addition to limits. Limits shall be no less than $1,000,000.00 per occurrence for all covered losses and no less than $2,000,000.00 general aggregate.

(b) Workers' Compensation Insurance. A policy of workers' compensation insurance on a state-approved policy form providing statutory benefits as required by law with employer's liability limits no less than $1,000,000.00 per accident for all covered losses. If Consultant has no employees, the Town may in its discretion require Consultant to complete and provide a declaration of sole proprietorship to the Contract Officer prior to the commencement of work, signed under penalty of perjury, confirming that he has no employees in lieu of the requirement to provide evidence of Worker's Compensation Insurance

(c) Professional Liability or Error and Omissions Insurance. A policy of professional liability insurance in an amount not less than $1,000,000.00 per claim with respect to loss arising from the actions of Consultant performing professional services hereunder on behalf of the Town.

All of the above policies of insurance shall be primary insurance. The general liability policy shall name the Town, its officers, employees and agents ("Town Parties") as additional insureds and shall waive all rights of subrogation and contribution it may have against the Town and the Town's Parties and their respective insurers. Moreover, where the primary insured does not satisfy the self-insured retention, the insurance policy must specify that any additional insured may satisfy the self-insured retention. All of said policies of insurance shall also provide that said insurance may not be cancelled without providing ten (10) days prior written notice by registered mail to the Town. In the event any of said policies of insurance are cancelled or amended, Consultant shall, prior to the

cancellation or amendment date, submit new evidence of insurance in conformance with this Section 5.1 to the Contract Officer. No work or services under this Agreement shall commence until Consultant has provided Town with Certificates of Insurance or appropriate insurance binders evidencing the above insurance coverages and said Certificates of Insurance or binders are approved by Town.

Consultant agrees that the provisions of this Section 5.1 shall not be construed as limiting in any way the extent to which Consultant may be held responsible for the payment of damages to any persons or property resulting from Consultant's activities or the activities of any person or persons for which Consultant is otherwise responsible.

The insurance required by this Agreement shall be satisfactory only if issued by companies qualified to do business in Texas, rated "A" or better in the most recent edition of Best Rating Guide or The Key Rating Guide, and only if they are of a financial category Class VII or better, unless such requirements are waived by the Town Administrator of the Town due to unique circumstances.

In the event that the Consultant is authorized to subcontract any portion of the work or services provided pursuant to this Agreement, the contract between the Consultant and such subcontractor shall require the subcontractor to maintain the same policies of insurance that the Consultant is required to maintain pursuant to this Section 5.1.

5.2 **INDEMNIFICATION**.

(a) TO THE FULL EXTENT PERMITTED BY LAW, CONSULTANT SHALL INDEMNIFY, DEFEND AND HOLD HARMLESS TOWN, ITS OFFICERS, AGENTS, EMPLOYEES, AND REPRESENTATIVES, FROM AND AGAINST ANY LIABILITY (INCLUDING LIABILITY FOR CLAIMS, SUITS, ACTIONS, LOSSES, EXPENSES OR COSTS OF ANY KIND, WHETHER ACTUAL, ALLEGED OR THREATENED, INCLUDING ATTORNEYS' FEES AND COSTS, COURT COSTS, DEFENSE COSTS AND EXPERT WITNESS FEES), WHICH MAY ARISE BY REASON OF DEATH OR INJURY TO PROPERTY OR PERSONS, WHERE THE SAME ARISE OUT OF, ARE A CONSEQUENCE OF, OR ARE IN ANY WAY ATTRIBUTABLE TO, IN WHOLE OR IN PART, THE PERFORMANCE OF THIS AGREEMENT BY CONSULTANT OR BY ANY INDIVIDUAL OR ENTITY FOR WHICH CONSULTANT IS LEGALLY LIABLE, INCLUDING BUT NOT LIMITED TO OFFICERS, AGENTS, EMPLOYEES OR SUBCONTRACTORS OF CONSULTANT. THIS SECTION 5.2 SHALL SURVIVE TERMINATION OF THIS AGREEMENT.

6.0 RECORDS AND REPORTS

6.1 Reports. Consultant shall periodically prepare and submit to the Contract Officer such reports concerning the performance of the services required by this Agreement as the Contract Officer shall require.

6.2 Records. Consultant shall keep, and require subcontractors to keep, such books and records as shall be necessary to perform the services required by this Agreement and enable the Contract Officer to evaluate the performance of such services. The Contract Officer shall have full and free access to such books and records at all times during normal business hours of Town, including the right to inspect, copy, audit and make records and transcripts from such records. Such records shall be

maintained for a period of two (2) years following completion of the services hereunder, and the Town shall have access to such records in the event any audit is required.

6.3 Ownership of Documents. All drawings, specifications, reports, records, documents and other materials prepared by Consultant, its employees, subcontractors and agents in the performance of this Agreement shall be the property of Town and shall be delivered to Town upon request of the Contract Officer or upon the termination of this Agreement and Consultant shall have no claim for further employment or additional compensation as a result of the exercise by Town of its full rights of ownership of such documents and materials. Consultant may retain copies of such documents for its own use, and Consultant shall have an unrestricted right to use the concepts embodied therein. Any use of such completed documents by Town for other projects and/or use of uncompleted documents without specific written authorization by the Consultant will be at the Town's sole risk and without liability to Consultant, and the Town shall indemnify the Consultant for all damages resulting therefrom. All subcontractors shall provide for assignment to Town of any documents or materials prepared by them, and in the event, Consultant fails to secure such assignment, Consultant shall indemnify Town for all damages resulting therefrom.

7.0 ENFORCEMENT OF AGREEMENT

7.1 Texas Law. This Agreement shall be construed and interpreted both as to validity and to performance of the parties in accordance with the laws of the State of Texas. Venue for all legal actions concerning any dispute, claim or matter arising out of or in relation to this Agreement shall be in Dallas County, Texas, and Consultant agrees to submit to the personal jurisdiction of such court in the event of such action.

7.2 Retention of Funds. Consultant hereby authorizes Town to deduct from any amount payable to Consultant (whether or not arising out of this Agreement) (i) any amounts the payment of which may be in dispute hereunder or which are necessary to compensate Town for any losses, costs, liabilities, or damages suffered by Town, and (ii) all amounts for which Town may be liable to third parties, by reason of Consultant's acts or omissions in performing or failing to perform Consultant's obligation under this Agreement. In the event that any claim is made by a third party, the amount or validity of which is disputed by Consultant, Town may withhold from any payment due, without liability for interest because of such withholding, an amount sufficient to cover such claim. The failure of Town to exercise such right to deduct or to withhold shall not, however, affect the obligations of the Consultant to insure, indemnify, and protect Town as elsewhere provided herein.

7.3 Waiver. No delay or omission in the exercise of any right or remedy by a non-defaulting party on any default shall impair such right or remedy or be construed as a waiver. A party's consent to or approval of any act by the other party requiring the party's consent or approval shall not be deemed to waive or render unnecessary the other party's consent to or approval of any subsequent act. Any waiver by either party of any default must be in writing and shall not be a waiver of any other default concerning the same or any other provision of this Agreement.

7.4 Termination Prior to Expiration of Term. Either party may terminate this Agreement at any time, with or without cause, upon thirty (30) days' written notice to the other party. Upon receipt of any notice of termination, Consultant shall immediately cease all work or services hereunder except such as may be specifically approved by the Contract Officer. Consultant shall be entitled to compensation for the reasonable value of the work product actually produced prior to the effective date

of the notice of termination and for any services authorized by the Contract Officer thereafter in accordance with the Schedule of Compensation, and Town shall be entitled to reimbursement for any compensation paid in excess of the services rendered.

7.5 Completion of Work After Termination for Default of Consultant. If termination is due to the failure of the Consultant to fulfill its obligations under this Agreement, Town may, after compliance with the provisions of Section 7.4, take over the work and prosecute the same to completion by contract or otherwise, and the Consultant shall be liable to the extent that the total cost for completion of the services required hereunder exceeds the compensation herein stipulated (provided that the Town shall use reasonable efforts to mitigate such damages), and Town may withhold any payments to the Consultant for the purpose of set-off or partial payment of the amounts owed the Town as previously stated.

7.6 Attorneys' Fees. If either party to this Agreement is required to initiate or defend or made a party to any action or proceeding in any way connected with this Agreement, the prevailing party in such action or proceeding, in addition to any other relief which may be granted, shall be entitled to reasonable attorneys' fees, and to all other reasonable costs for investigating such action, taking depositions and discovery, including all other necessary costs the court allows which are incurred in such litigation.

8.0 TOWN OFFICERS AND EMPLOYEES: NON-DISCRIMINATION

8.1 Non-liability of Town Officers and Employees. No officer or employee of the Town shall be personally liable to the Consultant, or any successor in interest, in the event of any default or breach by the Town or for any amount which may become due to the Consultant or to its successor, or for breach of any obligation of the terms of this Agreement.

8.2 Conflict of Interest; Town. No officer or employee of the Town shall have any financial interest in this Agreement, nor shall any such officer or employee participate in any decision relating to the Agreement which affects his financial interest or the financial interest of any corporation, partnership or association in which he is interested, in violation of any State statute or regulation.

8.3 Conflicts of Interest; Consultant. Consultant agrees that it will not engage in any transaction, activity or conduct that would result in a conflict of interest under this Agreement. During the term of this Agreement, Consultant shall not hire personnel currently employed by Town to perform any work under this Agreement. Consultant shall promptly inform Town of any contract, arrangement, or interest that Consultant may enter into or have during the performance of this Agreement that might appear to conflict with Town's interests. This includes contracts and arrangements with manufacturers, suppliers, contractors or other clients whose interests might be served by the work performed under this Agreement. Consultant shall take such measures as are necessary in the performance of this Agreement to prevent actual conflicts of interest. Town, in its sole discretion, shall determine the existence of a conflict of interest and may terminate this Agreement in the event such a conflict of interest exists upon sending Consultant written notice describing the conflict.

8.4 Covenant Against Discrimination. Consultant covenants that, by and for itself, its executors, assigns, and all persons claiming under or through them, that there shall be no

discrimination against or segregation of, any person or group of persons on account of race, color, creed, religion, sex, marital status, national origin, or ancestry in the performance of this Agreement. Consultant shall take affirmative action to ensure that applicants are employed and that employees are treated during employment without regard to their race, color, creed, religion, sex, marital status, national origin or ancestry.

9.0 MISCELLANEOUS PROVISIONS

9.1 Notice. Any notice or other communication either party desires or is required to give to the other party or any other person shall be in writing and either served personally or sent by prepaid, first-class mail, in the case of the Town, to the Town Administrator and to the attention of the Contract Officer, Town of Highland Park, 4700 Drexel Drive Highland Park, TX 75025 and in the case of the Consultant, to the person at the address designated on the execution page of this Agreement. Either party may change its address by notifying the other party of the change of address in writing. Notice shall be deemed communicated at the time personally delivered or in seventy-two (72) hours from the time of mailing if mailed as provided in this Section.

9.2 Interpretation. The terms of this Agreement shall be construed in accordance with the meaning of the language used and shall not be construed for or against either party by reason of the authorship of this Agreement or any other rule of construction which might otherwise apply.

9.3 Integration; Amendment. It is understood that there are no oral agreements between the parties hereto affecting this Agreement and this Agreement supersedes and cancels any and all previous negotiations, agreements and understandings, if any, between the parties, and none shall be used to interpret this Agreement. This Agreement may be amended at any time by an instrument in writing signed by both parties.

9.4 Severability. Should a portion of this Agreement be declared invalid or unenforceable by a judgment or decree of a court of competent jurisdiction, such invalidity or unenforceability shall not affect any of the remaining portions of this Agreement which are hereby declared as severable and shall be interpreted to carry out the intent of the parties unless the invalid provision is so material that its invalidity deprives either party of the basic benefit of their bargain or renders this Agreement meaningless.

9.5 Corporate Authority. The persons executing this Agreement on behalf of the parties hereto warrant that (i) such party is duly organized and existing, (ii) they are duly authorized to execute and deliver this Agreement on behalf of said party, (iii) by so executing this Agreement, such party is formally bound to the provisions of this Agreement, and (iv) the entering into this Agreement does not violate any provision of any other Agreement to which said party is bound.

IN WITNESS WHEREOF, the parties have executed and entered into this Agreement as of the date first written above.

TOWN:
TOWN OF HIGHLAND PARK,
a municipal corporation

By: _____
Tobin E. Maples, Town Administrator

ATTEST:

_____
Joanna Mekeal, Town Secretary

APPROVED AS TO FORM:

By: _____
Town Attorney

CONSULTANT:
Patrick Ibarra
Dba The Mejorando Group, a sole proprietorship

By: _____

Name: Patrick Ibarra
Title: Owner
Address: 13 Muirfield Road
Cumberland, Maine 04021

EXHIBIT "A"
SCOPE OF SERVICES

Consultant shall provide services with the objective of assisting Town officials and management staff develop a Strategic Plan. The scope of work for the services to be performed under this Agreement shall generally consist of the following:

Date	Activity
May	1. **Engage** – Initiate the Process
August	2. **Enlist** – Conduct interviews with elected officials, Town executives and a range of Town employees along with targeted community outreach (via online and three community conversations). A summary of input gathered will be prepared and shared.
September	3. **Examine and Explore** – Design and facilitate full-day retreat with Mayor and Council
October/November	4. **Explore** – Provide advisory consulting services to Town executives in crafting Goals, Objectives, Tactics and Performance Metrics Prepare a draft of the Strategic Plan and present it to the Mayor and Council at a work session for their review and discussion. Incorporate edits into the Strategic Plan.
December	Strategic Plan adopted by Mayor and City Council
October January	5. **Execute**: Implement the Strategic Plan

EXHIBIT "B"

SCHEDULE OF COMPENSATION

In connection with the services provided pursuant to the terms of this Agreement, Town will pay Consultant upon completion of the services, upon Town's receipt of a written invoice provided by Consultant. The Fee Schedule is:

The hourly rate for Mr. Ibarra is $325 and Ms. Newcomer is $110 and covers services related to conducting interviews, preparing summaries, creating outreach program, reviewing summaries, etc. The estimate for Mr. Ibarra is 80 hours = $26,000 and 25 hours for Ms. Newcomer = $2,750.

Rate for facilitation is $4,850 for a full day. Estimate is one full-day session will be held for a total fee of $4,850. Total Fee is $33,600.

Total Fee is $33,600.

Other expenses would be reasonable and customary travel-related expenses.

EXHIBIT "C"

SCHEDULE OF PERFORMANCE

The anticipated completion date for providing services is December 31, 2025.